LS3300
AC Power Calibrator
USER'S MANUAL

YOKOGAWA
Yokogawa Test & Measurement Corporation

IM LS3300-01EN
3rd Edition

Product Registration

Thank you for purchasing YOKOGAWA products.

YOKOGAWA provides registered users with a variety of information and services. Please allow us to serve you best by completing the product registration form accessible from our website.

http://tmi.yokogawa.com/

Thank you for purchasing the LS3300 AC Power Calibrator.
The LS3300 is a calibrator that generates AC voltage, current, and power(phantom load method). This user's manual explains the features, operating procedures, and handling precautions of the LS3300. To ensure correct use, please read this manual thoroughly before operation. Keep this manual in a safe place for quick reference in the event that a question arises. The following manuals, including this one, are provided as manuals for the LS3300. Please read all manuals.

List of Manuals

Manual Title	Manual No.	Description
LS3300 AC Power Calibrator User's Manual	IM LS3300-01EN	This manual. The manual explains the handling precautions, features, specifications, communication interfaces, how to operate the LS3300, and so on.
LS3300 AC Power Calibrator	IM LS3300-92Z1	Document for China.

The "EN" and "Z1" in the manual numbers are the language codes.

Contact information of Yokogawa offices worldwide is provided on the following sheet.

Document No.	Description
PIM 113-01Z2	List of worldwide contacts.

Notes

- The contents of this manual are subject to change without prior notice as a result of continuing improvements to the instrument's performance and functions. The figures given in this manual may differ from those that actually appear on your screen.
- Every effort has been made in the preparation of this manual to ensure the accuracy of its contents. However, should you have any questions or find any errors, please contact your nearest YOKOGAWA dealer.
- Copying or reproducing all or any part of the contents of this manual without the permission of YOKOGAWA is strictly prohibited.
- The TCP/IP software of this product and the documents concerning it have been developed/created by YOKOGAWA based on the BSD Networking Software, Release 1 that has been licensed from the Regents of the University of California.

High voltage

The LS3300 generates sine waves up to 1250 Vrms.
- To prevent electric shock, be sure to read this manual before use.
- Improper operation may lead to serious, life-threatening accidents. Keep this manual close to the LS3300 so that the operator can refer to it anytime.

French

Haute tension

LS3300 génère un sinusoïdal jusqu'à 1250 Vrms.
- Afin d'éviter tout choc électrique, bien lire le présent manuel avant utilisation.
- Une utilisation incorrecte entrainerait des risques d'accidents graves voire mortels. Conservez ce manuel à proximité du LS3300, de sorte que l'opérateur puisse le consulter à tout moment.

3rd Edition: June 2018 (YMI)
All Rights Reserved, Copyright © 2017 Yokogawa Test & Measurement Corporation

Trademarks

- Microsoft, Internet Explorer, MS-DOS, Windows, Windows 7, Windows 8, Windows 8.1, and Windows 10 are registered trademarks or trademarks of Microsoft Corporation in the United States and/or other countries.
- Adobe and Acrobat are either registered trademarks or trademarks of Adobe Systems Incorporated.
- In this manual, the ® and TM symbols do not accompany their respective registered trademark or trademark names.
- Other company and product names are trademarks or registered trademarks of their respective holders.

Revisions

1st Edition: August 2017
2nd Edition: October 2017
3rd Edition: June 2018

Checking the Contents of the Package

Unpack the box, and check the following before operating the instrument. If the wrong items have been delivered, if items are missing, or if there is a problem with the appearance of the items, contact your nearest YOKOGAWA dealer.

LS3300

Check that the product that you received is what you ordered by referring to the model name and suffix code given on the name plate on the side panel.

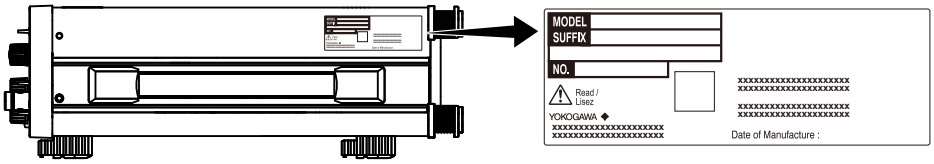

MODEL and SUFFIX Codes

Model	Suffix Code[1]	Specifications
LS3300		1200V, 60A
Power cord[2]	-D	UL/CSA standard and PSE power cord, maximum rated voltage: 125 V
	-F	VDE/Korean standard power cord, maximum rating: 250 V
	-R	Australian standard power cord, maximum rating: 250 V
	-Q	British standard power cord, maximum rating: 250 V
	-H	Chinese standard power cord, maximum rating: 250 V
	-N	Brazilian standard power cord, maximum rating: 250 V
	-T	Taiwanese standard power cord, maximum rated voltage: 125 V
	-Y	No power cord included.

1 For products whose suffix code contains “Z,” an exclusive manual may be included. Please read it along with the standard manual.

2 Make sure that the power cord meets the designated standards of the country and area that you are using it in.

No. (Instrument number)

When contacting the dealer from which you purchased the instrument, please give them the instrument number.

Standard Accessories

The following accessories are included. Make sure that all accessories are present and undamaged.

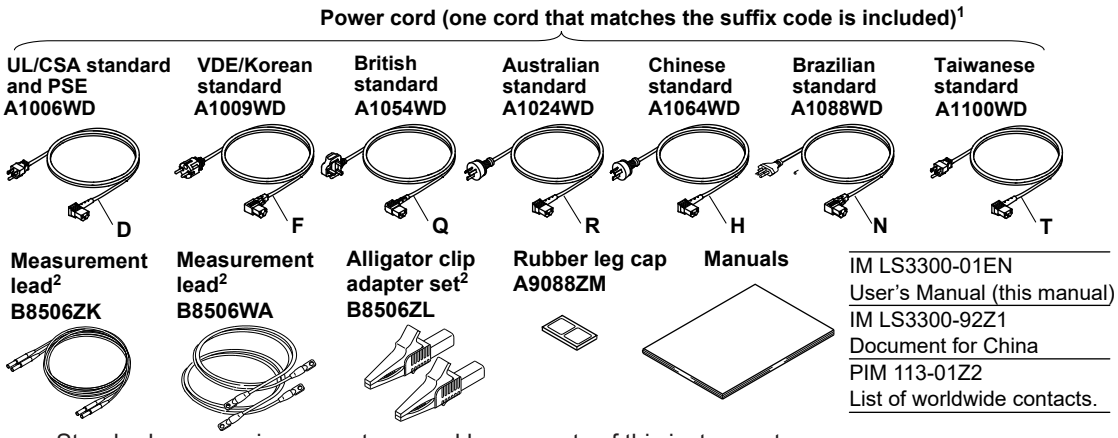

Standard accessories are not covered by warranty of this instrument.

1 Make sure that the attached power cord meets the designated standards of the country and area that you are using it in.
The power code is not included for the suffix code "-Y" model. Make sure that the power cord you will use meets the designated standards of the country and area that you are using it in.

2 The included measurement leads and alligator clip adapter set are exclusive to this product.

Optional Accessories (Sold separately)

The following optional accessories are available for purchase separately.

For information about ordering accessories, contact your nearest YOKOGAWA dealer.

Item	Model/ Part No.	Min. Q'ty	Safety Standard	Note	Manual No.
Measurement lead	758917	1 set	1000 V CAT II	Safety terminal cable. Red and black, 1 pc each. Length: 0.75 m. Rating: 1000 V, 32 A	—
	758933	1 set	1000 V CAT III	Safety terminal cable. Red and black, 1 pc each. Length: 1 m. Rating: 1000 V, 19 A	—
	B8506ZK	1 set	1500 V CAT I	Safety terminal cable. Red and black, 1 pc each. Length: 1 m. Rating: 1500 V, 19 A	—
	B8506WA	1 set	—	Current output cable. Red and black, 1 pc each. Length: 1.5 m. Rating: 42 V, 80 A	—
Alligator clip adapter (small)	758922	1 set	300 V CAT II	Safety terminal-to-alligator clip adapter. Red and black, 1 pc each. Rating: 300 V, 15 A	—
Alligator clip adapter (large)	758929	1 set	1000 V CAT II	Safety terminal-to-alligator clip adapter. Red and black, 1 pc each. Rating: 1000 V, 32 A	—
	B8506ZL	1 set	1500 V CAT I	Safety terminal-to-alligator clip adapter. Red and black, 1 pc each. Rating: 1500 V, 32 A	—
Fork terminal adapter	758921	1 set	1000 V CAT II	Safety terminal-to-fork terminal adapter. Red and black, 1 pc each. Rating: 1000 V, 20 A	—
BNC cable	366924	1	—	BNC-BNC. Length: 1 m. Rating: 42 V	—
Safety terminal adapter	758923	1 set	600 V CAT II	Spring clamp type. Red and black, 1 pc. each. Rating: 600 V, 10 A	—
	758931	1 set	1000 V CAT III	Screw-in type. Red and black, 1 pc. each. Rating: 1000 V, 36 A	—
USB cable	A1421WL	1	—	USB 2.0 compatible USB A connector male-to-USB B connector female	
Rack mount kit	751535-E3	1 set	—	For EIA single mount	IM 751535-E3-01E
	751535-J3	1 set	—	For JIS single mount	IM 751535-J3-11E
Adapter	366923	1	—	BNC T	—

Optional accesories(sold separately) are not covered by warranty of this instrument.

WARNING

- Use the accessories specified in this manual. Moreover, use the accessories of this product only with Yokogawa products that specify them as accessories.
- Use the accessories of this product within the rated range of each accessory. When using several accessories together, use them within the specification range of the accessory with the lowest rating.
- Due to the structure of the fork terminal adapter 758921, it is possible to touch the metal parts of the terminal. Be careful of electric shock when using it.

CAUTION

- Use the BNC cables 366924 for the BNC external input/output terminals and the AUX output terminals.
- Use the adapter (BNC T 366923) on the BNC external input/output terminals.

French

AVERTISSEMENT

- Utiliser les accessoires spécifiés dans ce manuel. En outre, utiliser les accessoires de ce produit uniquement avec des produits Yokogawa pour lesquels ils sont spécifiés comme accessoires.
- Utilisez les accessoires de ce produit en fonction des valeurs nominales de chacun. Lorsque vous employez plusieurs accessoires en même temps, utilisez les valeurs de l’accessoire ayant les valeurs nominales les plus faibles.
- Compte tenu de la structure du produit, il est possible de toucher les pièces métalliques de l’adaptateur de borne à fourche 758921. Procédez avec soin, car cette opération présente un risque de choc électrique.

ATTENTION

- Utilisez les câbles BNC 366924 pour les bornes d'entrée / sortie externes BNC et les bornes de sortie AUX.
- Utilisez les adaptateur BNC 366923 (type T) pour les bornes d'entrée / sortie externes BNC.

Conventions Used in This Manual

Notes

The notes and cautions in this manual are categorized using the following symbols.

Improper handling or use can lead to injury to the user or damage to the instrument. This symbol appears on the instrument to indicate that the user must refer to the user's manual for special instructions. The same symbol appears in the corresponding place in the user's manual to identify those instructions. In the manual, the symbol is used in conjunction with the word "WARNING" or "CAUTION."

WARNING Calls attention to actions or conditions that could cause serious or fatal injury to the user, and precautions that can be taken to prevent such occurrences.

CAUTION Calls attention to actions or conditions that could cause light injury to the user or damage to the instrument or user's data, and precautions that can be taken to prevent such occurrences.

French

AVERTISSEMENT Attire l'attention sur des gestes ou des conditions susceptibles de provoquer des blessures graves (voire mortelles), et sur les précautions de sécurité pouvant prévenir de tels accidents.

ATTENTION Attire l'attention sur des gestes ou des conditions susceptibles deprovoquer des blessures légères ou d'endommager l'instrument ou lesdonnées de l'utilisateur, et sur les précautions de sécurité susceptiblesde prévenir de tels accidents.

Note Calls attention to information that is important for the proper operation of the instrument.

Symbols and Conventions Used in Procedural Explanations

The contents of the procedural explanations are indicated using the following symbols.

Procedure Carry out the procedure according to the step numbers. All procedures are written under the assumption that you are starting operation at the beginning of the procedure, so you may not need to carry out all the steps in a procedure when you are changing the settings.

Explanation This section describes the setup items and the limitations regarding the procedures. It may not give a detailed explanation of the feature. For a detailed explanation of the feature, see chapter 2.

<<Command Mnemonic>>

Indicates a communication command that corresponds to some of the features described on the procedural explanation page.

Characters and Terminology Used in Procedural Explanations

Panel Keys and Soft Keys

Bold characters used in the procedural explanations indicate panel keys or soft keys (setup menus).

Safety Precautions

This product is designed to be used by a person with specialized knowledge.
This instrument is an IEC safety class I instrument (provided with a terminal for protective earth grounding).
The general safety precautions described herein must be observed during all phases of operation.
If the instrument is used in a manner not specified in this manual, the protection provided by the instrument may be impaired. YOKOGAWA assumes no liability for the customer's failure to comply with these requirements.
This manual is part of the product and contains important information. Store this manual in a safe place close to the instrument so that you can refer to it immediately. Keep this manual until you dispose of the instrument.

The following symbols are used on this instrument.

Warning: handle with care. Refer to the user's manual or service manual. This symbol appears on dangerous locations on the instrument which require special instructions for proper handling or use. The same symbol appears in the corresponding place in the manual to identify those instructions.

Electric shock, danger

Ground (earth) or functional ground terminal (do not use this terminal as a protective ground terminal)

Alternating current

On (power)

Off (power)

Power-on state

Power-off state

French

Avertissement : À manipuler délicatement. Toujours se reporter aux manuels d'utilisation et d'entretien. Ce symbole a été apposé aux endroits dangereux de l'instrument pour lesquels des consignes spéciales d'utilisation ou de manipulation ont été émises. Le même symbole apparaît à l'endroit correspondant du manuel pour identifier les consignes qui s'y rapportent.

Choc électrique, danger

Borne de terre ou borne de terre fonctionnelle (ne pas utiliser cette borne comme prise de terre.)

Courant alternatif

Marche (alimentation)

Arrêt (alimentation)

Marche

Arrêt

Follow the precautions below. Failure to comply with the precautions below could lead to injury or death or damage to the instrument.

WARNING

Use the Instrument Only for Its Intended Purpose
This instrument is an AC power calibrator that generates AC voltage and AC current. Use this instrument only as a generator and power calibrator.

Check the Physical Appearance
Do not use the instrument if there is a problem with its physical appearance.

Use the Correct Power supply
Make sure that the power supply voltage matches the instrument's rated supply voltage and that it does not exceed the maximum voltage range of the power cord you will use.

Use the Correct Power Cord and Plug
To prevent fire and electric shock, only use a power cord that meets the standards of the country or region where you use this equipment. The main power plug must be plugged into an outlet with a protective earth terminal. Do not invalidate this protection by using an extension cord without protective earth grounding.
Additionally, do not use the power cord for this instrument with another instrument.

Connect the Protective Grounding Terminal
Make sure to connect the protective earth to prevent electric shock before turning on the power. The power cord for this instrument is a three-prong type power cord. Connect the power cord to a properly grounded three-prong outlet.

Do Not Impair the Protective Grounding
Never cut off the internal or external protective earth wire or disconnect the wiring of the protective earth terminal. Doing so may result in electric shock or damage to the instrument.

Do Not Use When the Protection Functions Are Defective
Before using this instrument, check that the protection functions, such as the protective grounding and fuse, are working properly. If you suspect a defect, do not use the instrument.

Do Not Operate in an Explosive Atmosphere
Do not operate the instrument in the presence of flammable gases or vapors. Doing so is extremely dangerous.

Do Not Remove the Covers or Disassemble or Alter the Instrument
Only qualified YOKOGAWA personnel may remove the covers and disassemble or alter the instrument. The inside of the instrument is dangerous because parts of it have high voltages.

Ground the Instrument before Making External Connections
Securely connect the protective grounding before connecting to the target device or to an external control unit. Before touching the target device, turn off this instrument and check that there is no voltage or current being generated.

Measurement Category
The measurement category of the LS3300 terminals is Other (O). Do not use it for main power supply circuits or circuits that fall under Measurement Categories II, III, and IV.

Install or Use the Instrument in Appropriate Locations

- Do not install or use the instrument outdoors or in locations subject to rain or water.
- Install the instrument so that you can immediately remove the power cord if an abnormal or dangerous condition occurs.

Be Careful When Generating High Voltage

- This product generates high voltage. Be careful of electric shock and electric discharge.
- To prevent electric shock, remove rings, watches, and other metallic accessories and jewelry before operation.

Connect Cables Correctly

This instrument can generate large voltage and current. If you do not connect the devices correctly, not only will it damage the instrument or the target device, it may also lead to electric shock or fire. Be careful when you wire the cables, and be sure to check the following points.

Before output (before turning on the output), check that:

- Cables have been wired to the instrument's output terminals correctly.
  Check that there are no voltage output cables that have been connected to the current terminals.
  Check that there are no current output cables that have been connected to the voltage terminals.
- Cables have been connected to the target device correctly.
  Check that there are no short circuits between voltage terminals or between the cables connected to the voltage terminals.
- The cables are connected firmly to the current terminals.
- There no problems with the current terminals and the crimping terminals, such as the presence of foreign substances.

During output (never touch the terminals or the connected cables when this instrument is on), check that:

- There no problems with the current terminals and the crimping terminals, such as the presence of foreign substances.
- The current terminals are not abnormally hot.
- The cables are connected firmly to the current terminals.
  The terminal connections may become loose over time. If this happens, heat may be generated due to changes in contact resistance. Periodically check that the cables are firmly connected to the terminals. Be sure to turn off both this instrument and the target device before you check the connections.

After output (immediately after the output is turned off)

After you generate a large voltage or current, voltage may remain for some time even after you turn the output off. This residual voltage may lead to electric shock. Do not touch the voltage or current terminals immediately after you turn the output off. The amount of time that voltage remains varies depending on the target device.

CAUTION

Operating Environment Limitations

This product is a Class A (for industrial environment) product. Operation of this product in a residential area may cause radio interference in which case the user will be required to correct the interference.

French

AVERTISSEMENT

Utiliser l’instrument aux seules fins pour lesquelles il est prévu
Cet instrument comprend une tension CA et courant standard. Il génère une tension CA et un courant CA. Utilisez cet instrument à cette fin uniquement.

Inspecter l’apparence physique
Ne pas utiliser l’instrument si son intégrité physique semble être compromise.

Vérifier l'alimentation
Assurez-vous que la tension d'alimentation correspond à la tension d'alimentation nominale de l'appareil et qu'elle ne dépasse pas la plage de tension maximale du cordon d'alimentation à utiliser.

Utiliser le cordon d’alimentation et la fiche adaptés
Pour éviter les risques d'électrocution ou d'incendie, veillez à utiliser le cordon d'alimentation de l'appareil qui répond aux normes du pays ou de la région où vous utilisez cet équipement. La fiche doit être branchée sur une prise secteur raccordée à la terre. En cas d’utilisation d’une rallonge, celle-ci doit être impérativement reliée à la terre. Par ailleurs, n’utilisez pas le cordon d'alimentation fourni pour cet instrument avec un autre appareil.

Brancher la prise de terre
Avant de mettre l’instrument sous tension, penser à brancher la prise de terre pour éviter tout choc électrique. Le cordon d’alimentation livré avec l’instrument est doté de trois broches. Brancher le cordon d’alimentation sur une prise de courant à trois plots et mise à la terre.

Ne pas entraver la mise à la terre de protection
Ne jamais neutraliser le fil de terre interne ou externe, ni débrancher la borne de mise à la terre. Cela pourrait entraîner un choc électrique ou endommager l’instrument.

Ne pas utiliser lorsque les fonctions de protection sont défectueuses
Avant d’utiliser l'instrument, vérifier que les fonctions de protection, telles que le raccordement à la terre et le fusible, fonctionnent correctement. En cas de dysfonctionnement possible, ne pas utiliser l’instrument.

Ne pas utiliser dans un environnement explosif
Ne pas utiliser l’instrument en présence de gaz ou de vapeurs inflammables. Cela pourrait être extrêmement dangereux.

Ne pas retirer le capot, ni démonter ou modifier l’instrument
Seul le personnel YOKOGAWA qualifié est habilité à retirer le capot et à démonter ou modifier l’instrument. Certains composants à l’intérieur de l'instrument sont à haute tension et par conséquent, représentent un danger.

Relier l’instrument à la terre avant de le brancher sur des connexions externes
Connectez le conducteur de terre avant de raccorder le dispositif cible ou une unité de commande externe. Avant de toucher le dispositif cible, mettez l’instrument hors tension, et vérifiez qu’aucune tension ni aucun courant ne sont émis.

Catégorie de mesure
La catégorie de mesure des bornes LS3300 est O (Other, Autre). Ne l'utilisez pas pour les circuits d'alimentation principale ou ceux correspondant aux catégories de mesure II, III et IV.

Installer et utiliser l’instrument aux emplacements appropriés
- Ne pas installer, ni utiliser l'instrument à l’extérieur ou dans des lieux exposés à la pluie ou à l’eau.
- Installer l’instrument de manière à pourvoir immédiatement le débrancher du secteur en cas de fonctionnement anormal ou dangereux.

Manipulez avec précaution lors de la génération de tension élevée

- Le produit génère une tension élevée. Faites attention au choc électrique et à la décharge électrique.
- Afin d'éviter tout choc électrique, retirer les bagues, les montres et autres accessoires métalliques ainsi que les bijoux avant la mise en service.

Câblage correct

Cet équipement délivre une tension et une intensité élevées. Si vous ne raccordez pas correctement les appareils, non seulement cela risque d'endommager l'équipement ou l'appareil cible, mais en plus cela risque d'entraîner un choc électrique ou un incendie. Branchez toujours les câbles en plomb correctement et vérifiez les points suivants.

Avant le sortie (avant la mise sous tension), vérifier que :

- Les câbles en plomb sont correctement raccordés aux bornes de sortie de l'équipement.
  Les câbles de sortie de la tension n'ont pas été malencontreusement branchés sur les bornes de courant.
  Les câbles de sortie du courant n'ont pas été malencontreusement branchés sur les bornes de tension.
- Les câbles ont été correctement branchés sur l'appareil voulu.
  Vérifier qu'il n'y a pas de court-circuit entre les bornes de tension ou entre les câbles raccordés aux bornes de tension.
- Les câbles ont été correctement branchés sur les bornes de courant.
- Il n'y a aucun problème avec les bornes d'entrée de courant et les bornes de sertissage, comme par exemple une présence de corps étrangers.

Pendant la sortie (ne pas toucher les bornes ni les câbles branchés lorsque l'instrument est sous tension), vérifier que :

- Il n'y a aucun problème avec les bornes d'entrée de courant et les bornes de sertissage, comme par exemple une présence de corps étrangers.
- Les bornes d'entrée ne chauffent pas anormalement.
- Les câbles ont été correctement branchés sur les bornes de courant.
  Les raccordements de bornes risquent de se détacher dans le temps. Le cas échéant, une chaleur peut être générée suite aux changements de résistance au contact. Vérifiez régulièrement que les câbles en plomb sont bien raccordés aux bornes. Éteignez bien à la fois cet équipement et l'appareil cible avant de vérifier les raccordements.

Après la sortie (tout de suite après la mise hors tension)

Une fois une tension ou un courant obtenu(e), la tension peut rester un certain temps, même après la mise hors tension. Cette tension résiduelle peut entraîner un choc électrique. Ne touchez pas immédiatement les bornes après la mise hors tension. La durée pendant laquelle le tension reste varie en fonction de l'appareil cible.

ATTENTION

Limitations relatives à l'environnement opérationnel

Ce produit est un produit de classe A (pour environnements industriels). L'utilisation de ce produit dans un zone résidentielle peut entraîner une interférence radio que l'utilisateur sera tenu de rectifier.

Sales in Each Country or Region

Waste Electrical and Electronic Equipment

Waste Electrical and Electronic Equipment (WEEE), Directive
(This directive is valid only in the EU.)
This product complies with the WEEE directive marking requirement. This marking indicates that you must not discard this electrical/electronic product in domestic household waste.

Product Category
With reference to the equipment types in the WEEE directive, this product is classified as a “Monitoring and control instruments” product.

Do not dispose in domestic household waste.. When disposing products in the EU, contact your local Yokogawa Europe B.V. office.

Authorized Representative in the EEA

Yokogawa Europe B.V. is the authorized representative of Yokogawa Test & Measurement Corporation for this product in the EEA. To contact Yokogawa Europe B. V., see the separate list of worldwide contacts, PIM 113-01Z2.

關於在台灣銷售

This section is valid only in Taiwan.
關於在台灣所販賣的符合其相關規定的電源線 A1100WD 的限用物質含量信息，請至下麵的網址進行查詢
https://tmi.yokogawa.com/support/service-warranty-quality/product-compliance/

Contents

Checking the Contents of the Package iii
Conventions Used in This Manual vi
Safety Precautions viii
Sales in Each Country or Region xiii

Chapter 1 Component Names and Functions

1.1 Panels 1-1
1.2 Screens 1-3

Chapter 2 Features

2.1 System Configuration 2-1
2.2 Voltage and Current Source 2-2
2.3 Sweeping 2-5
2.4 Synchronous Operation 2-7
2.5 Wiring System 2-8
2.6 Other Features 2-12

Chapter 3 Preparation

3.1 Handling Precautions 3-1
⚠ 3.2 Installing the Instrument 3-3
⚠ 3.3 Connecting to the Power Supply 3-6
3.4 Turning On and Off the Power Switch 3-8
⚠ 3.5 Wiring Precautions 3-10
⚠ 3.6 Connecting Cables 3-14

Chapter 4 Setting the Output Value

4.1 Setting the Output Voltage 4-1
4.2 Setting the Output Current 4-4
4.3 Setting the Sweep Function 4-7
4.4 Setting the Conversion Ratio of the Current Sensor 4-8
⚠ 4.5 Selecting Whether to Ground the LO Terminal (COMMON Terminal) 4-9
⚠ 4.6 Turning the Output On and Off 4-10
4.7 Turning the Sweep Function On and Off 4-12

Chapter 5 Synchronous Operation and Wiring Systems

⚠ 5.1 Configuring Synchronous Operation 5-1
5.2 Setting the Wiring System 5-5
5.3 Wiring System and Wiring 5-7
5.4 Outputting High Current 5-16
5.5 Checking the Master Device and Slave Devices 5-18

Chapter 6 Other Features

6.1 Turning the Beep Sound On and Off 6-1
6.2 Turning the Display On and Off and Setting the Brightness 6-2
6.3 Setting the Phase Display Type 6-3
6.4 Error Log Display 6-5
6.5 Initializing the Settings 6-6
6.6 Displaying the Product Information 6-7

Chapter 7 USB Interface

7.1 USB Interface Features and Specifications 7-1
7.2 Connecting through the USB Interface 7-2

Chapter 8 Ethernet Interface

8.1 Ethernet Interface Features and Specifications 8-1
8.2 Connecting to the Ethernet Interface 8-2
8.3 Configuring the LS3300 Ethernet Settings 8-3

Chapter 9 GP-IB Option

9.1 GP-IB Interface Features and Specifications 9-1
9.2 Connecting through the GP-IB Interface 9-3
9.3 Setting the GP-IB Address 9-5
9.4 Responses to Interface Messages 9-6

Chapter 10 Programming Overview

10.1 Messages 10-1
10.2 Commands 10-3
10.3 Responses 10-5
10.4 Data 10-6
10.5 Synchronization with the Controller 10-8

Chapter 11 Commands

11.1 List of Commands 11-1
11.2 COMMunicate Group 11-4
11.3 OSCillator Group 11-5
11.4 OUTPut Group 11-6
11.5 SOURce Group 11-7
11.6 STATus Group 11-10
11.7 SWEep Group 11-13
11.8 SYSTem Group 11-14
11.9 WIRing Group 11-17
11.10 Common Command Group 11-18

Chapter 12 Status Reports

12.1 About Status Reports 12-1
12.2 Status Byte 12-3
12.3 Standard Event Register 12-4
12.4 Extended Event Register 12-5
12.5 Output and Error Queues 12-6

Chapter 13 Troubleshooting, Maintenance, and Inspection

13.1 Troubleshooting 13-1
13.2 Error Code Descriptions and Corrective Actions 13-2
13.3 Communication Error Messages 13-4
13.4 Instrument Error Detection and Clearance 13-8
13.5 Self-Test 13-9
13.6 Cleaning the Filter 13-10
13.7 Recommended Part Replacement 13-12
13.8 Adjustment and Calibration 13-12
13.9 Disposing of the Instrument 13-12

Chapter 14 Specifications

14.1 Output Range 14-1
14.2 Accuracy 14-2
14.3 Stability 14-5
14.4 Temperature coefficient 14-5
14.5 Response Time 14-6
14.6 Distortion Rate 14-6
14.7 Settings and Display Items 14-7
14.8 Functions 14-8
14.9 External Input and Output 14-9
14.10 Computer Interface 14-10
14.11 General Specifications 14-11
14.12 External Dimensions 14-13

Appendix

Appendix 1 ..... Block Diagram App-1
Appendix 2 ..... Factory Default Settings App-3
Appendix 3 ..... About the IEEE 488.2-1992 Standard App-4
Appendix 4 ..... Calibrating the Phase Meter App-5

Index

1.1 Panels

Front Panel

CONFIG Key
Opens a menu for setting the wiring system, priority unit, reference signal (sync signal), sweep, current sensor's voltage-to-current conversion ratio, grounding of the LO terminal.
→ sec. 4.3, 4.4, 4.5, chapter 5

I key
Switches to the current setting screen
→ sec. 4.2

V key
Switches to the voltage setting screen
→ sec. 4.1

Arrow keys
Select the digit that the knob controls or change the setting position.

Knob
Changes values

ESC Key
Returns to the previous menu

OUTPUT section
Turns the voltage or current output on and off
→ sec. 4.6

HIGH VOLTAGE indicator
Illuminates when the voltage range is set to 300 V or 1000 V
→ sec. 4.6

Unit-in-operation indicator
The LED of the unit whose output can be controlled (on/off) light in green. If the connection is not correct, the LED blinks in red.
→ sec. 4.6

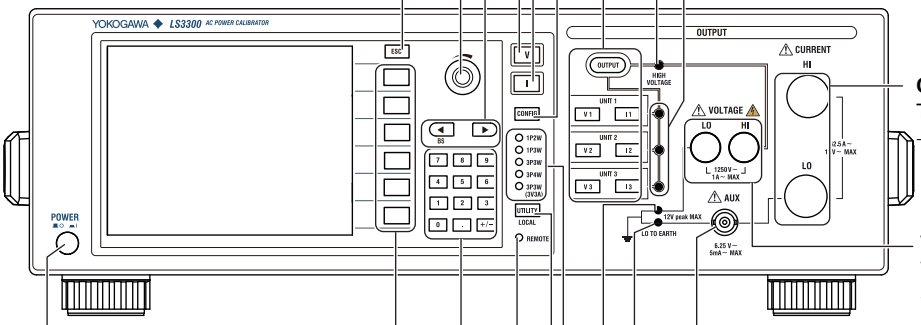

Current terminals ⚠
These output current.
→ sec. 3.6

Voltage terminals ⚠
These output voltage.
→ sec. 3.6

Power switch
Turns the power on and off
→ sec. 3.4

Soft keys
Select items on the setup menus

AUX terminal ⚠
Outputs the voltage that the current sensor outputs
→ sec. 3.6

LO TO EARTH indicator (current)
Indicates the grounding state of the LO terminal.
Illuminates when the current LO terminal's EARTH is on.
→ sec. 4.5

Numeric keypad
Enters numbers directly

LO TO EARTH indicator (voltage)
Indicates the grounding state of the LO terminal.
Illuminates when the voltage LO terminal' s EARTH is on.
→ sec. 4.5

REMOTE indicator
Illuminates when the LS3300 is in remote mode (controlled through communications)
→ sec. 7.1, 8.1, 9.1

Wiring system indicator
The LED corresponding to the selected wiring system illuminates.
→ sec. 5.2

UTILITY (LOCAL) key
Opens a menu for turning the beep sound on and off, turning the display on and off, setting the brightness, setting the type of the phase display, initializing the settings, displaying the error log, and executing calibration and self-test.
When the LS3300 is in remote mode (controlled through communications), this key switches the mode to local.
→ sec. 6, 8.3, 9.3, 13.5

Rear Panel

Ethernet port
Used to connect the LS3300 to a network (10BASE-T/100BASE-TX)
→ sec. 8.2

GP-IB connector
Used to control the LS3300 from a PC
→ sec. 9.2

Inlet holes ⚠
→ sec. 3.2

USB port
Used to connect the LS3300 to a PC that has a USB interface and to control the LS3300 with USB-TMC commands
→ sec. 5.3, 7.2

Link interface (UNIT2/UNIT3)
When synchronizing LS3300s, connect this terminal to control the output of the slave devices (UNIT2/UNIT3) from the master device. It is used to output voltage or current (balanced signal) according to specified wiring system or output large current.
→ sec. 5.3

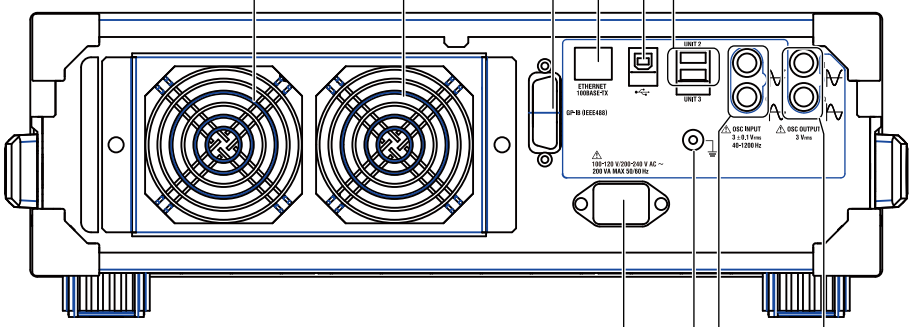

Power inlet ⚠
Connect the power cord.
→ sec. 3.3

Functional ground
→ sec. 3.3

External signal input terminal ⚠
Used to generate voltage or current on the basis of an external oscillator frequency or synchronize multiple LS3300s
→ sec. 5.1

Signal output terminals ⚠
Used to synchronize multiple LS3300s
→ sec. 5.1

Top and Bottom Panels

Top panel

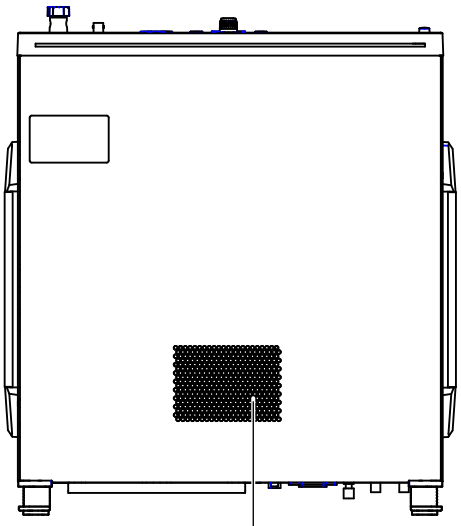

Bottom panel

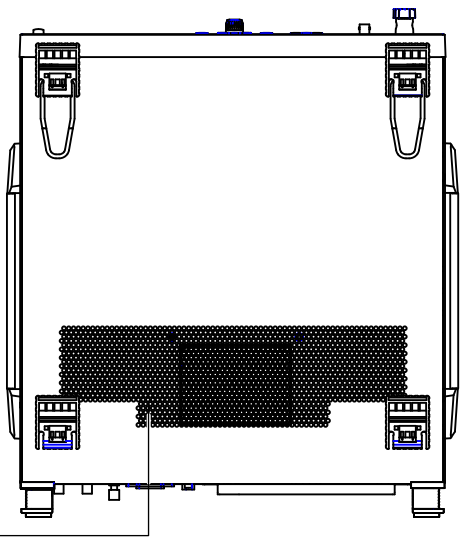

Outlet holes
→ sec. 3.2

1.2 Screens

Soft Key Menu

This is a menu displayed on the right side of the screen. You press the appropriate soft keys to control the instrument.

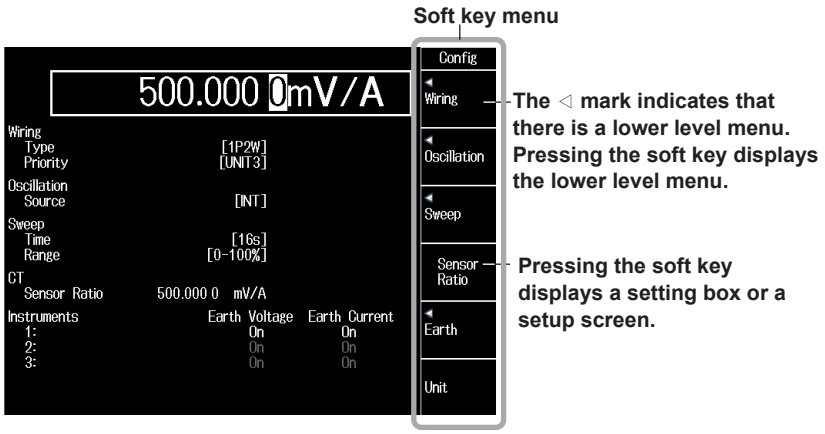

Lower level menu

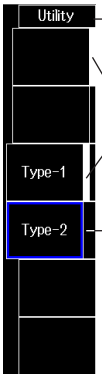

Voltage/Current Setup Screen

Voltage settings

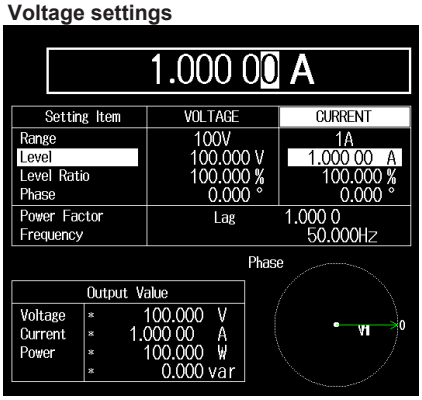

Current settings

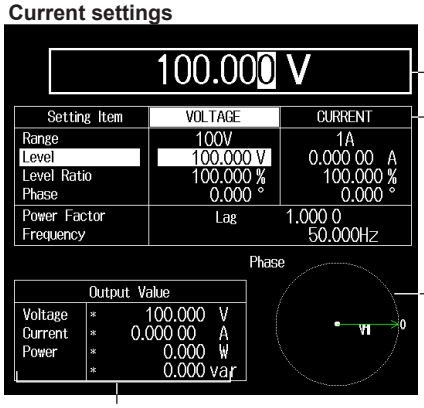

Output value calculated from output level × level ratio.
The asterisk is not displayed when the output is in the standby state.

Phase Display

Phases relative to the voltage and current reference signals are displayed by the direction of arrows. Amplitudes are not displayed. It can be displayed using the following two types.

Type1: Phase 0° (reference signal phase) points to the right. Arrows are displayed from the initial point.

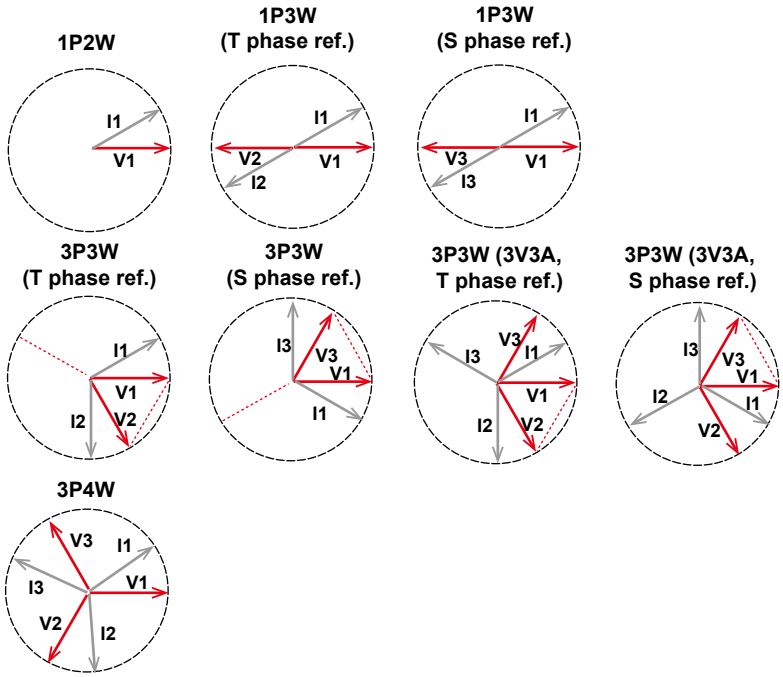

Example of 30° lead

Example of in-phase (0°)

Example of 30° lead

Type2: Phase 0° (reference signal phase) points up. For three-phase three-wire, the initial point of voltage is shifted.

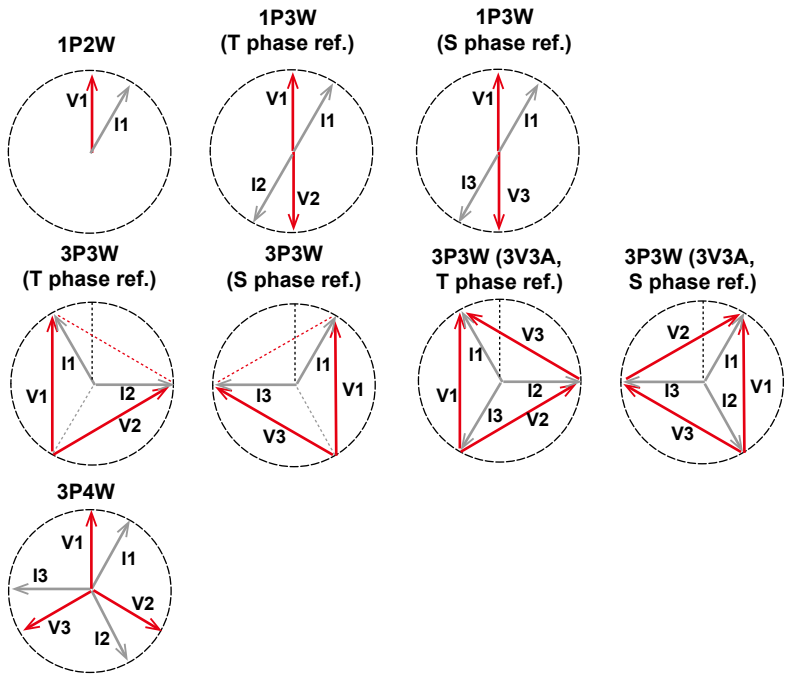

Example of 30° lag

Example of in-phase (0°)

Example of 30° lag

CONFIG Screen

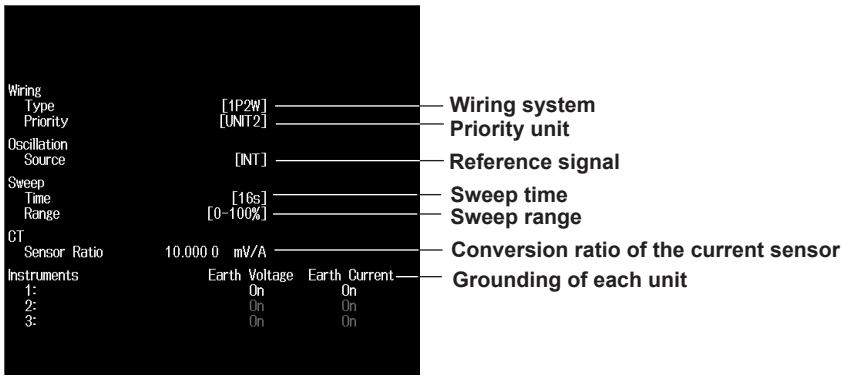

UTILITY Screen

The product information is displayed.

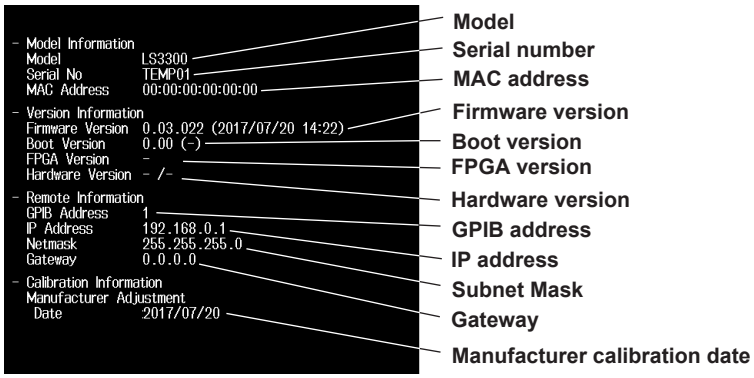

Status Indication

The status of the instrument is indicated at the top of the screen.

Status indication

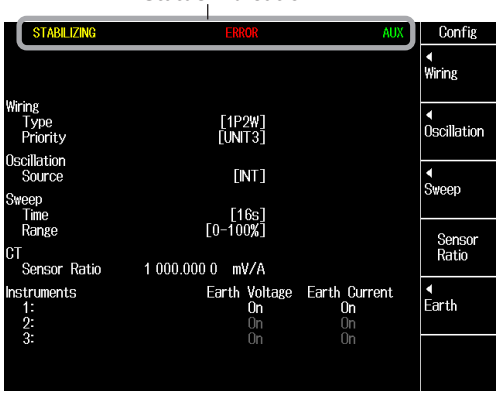

The following status is displayed.

STABILIZING: Displayed when sweeping is in progress, output is turned on or off, the settings related to output is changed, or when the output changes due to load.

ERROR: Displayed when an error remains in the error log.

AUX: Displayed when the current range is set to an external sensor range. When AUX is displayed, the value set on the current side is output from the AUX terminal.

2.1 System Configuration

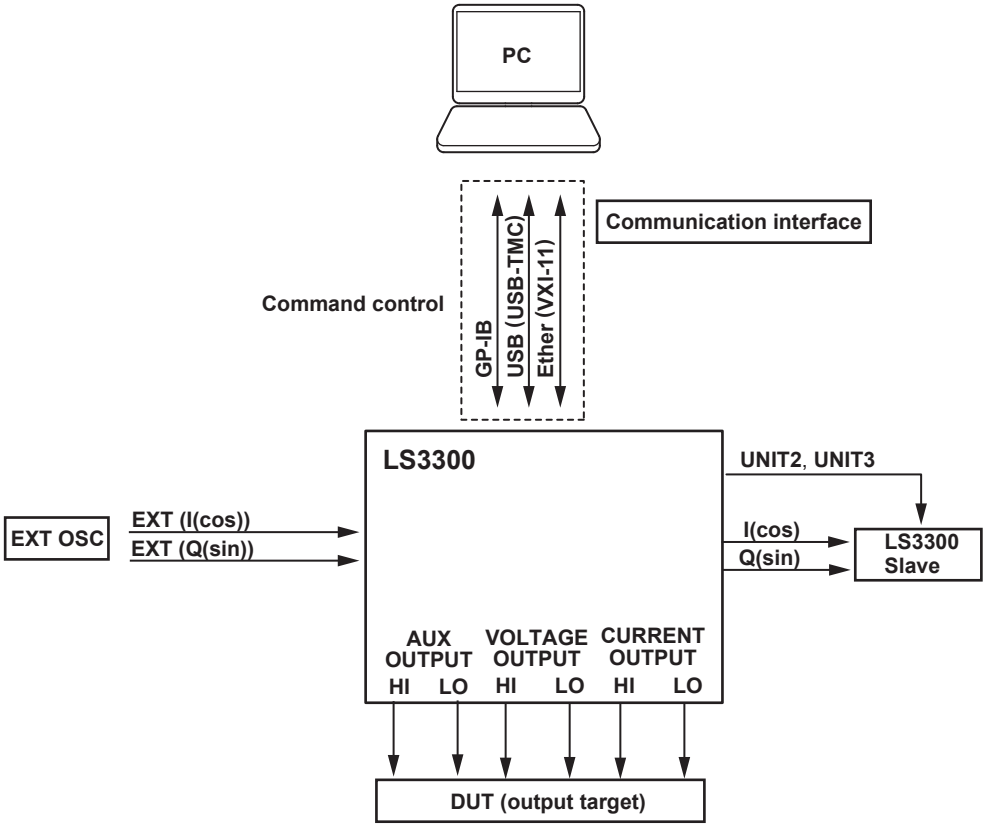

2.2 Voltage and Current Source

CAUTION

When voltage or current is being generated, if a load that would cause the range generated indicated below to be exceeded is connected, the instrument will detect the abnormal load and turn off the output.

French

ATTENTION

Lors de la génération de la tension ou du courant, si la charge appliquée risque de sortir de la plage générée indiquée ci-dessous, l'instrument détecte une charge anormale et coupe la sortie.

Voltage Range and Range Generated

The LS3300 voltage ranges are 1 V, 10 V, 30 V, 100 V, 300 V, and 1000 V.
The LS3300 voltage is set using output level × level ratio.
You can set the output level in the range of 0 to 120% of each voltage range. For example, the available output levels in the 10 V range is 0 to 12 V.
The level ratio can be set within a range in which the output voltage (output level × level ratio) is less than or equal to 125% of the voltage range.
For example, if you want to calibrate the 50 V range of a power meter at 0 V, 12.5 V, 25 V, 37.5 V, and 50 V, you need to set the voltage range to 100 V and the output level to 50 V and use the following level ratio settings: 0%, 25%, 50%, 75%, and 100%.
The maximum output is 125% of each voltage range rating. You may not be set the output to 125% due to the relationship between the level and level ratio.
If you set the voltage range to 300 V or 1000 V, the HIGH VOLTAGE indicator will illuminate. When the voltage is set to 150 V or higher, a beep is generated to alert the high voltage.

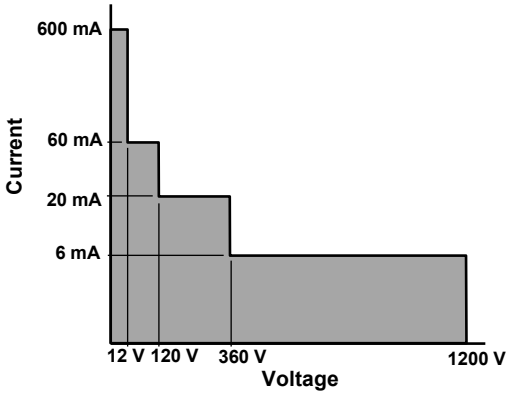

Range	Source Range[1]	Maximum Output[2]
1 V	0 V to 1.20000 V	0.5 A or more
10 V	0 V to 12.0000 V	600 mA
30 V	0 V to 36.0000 V	60 mA
100 V	0 V to 120.000 V	60 mA
300 V	0 V to 360.000 V	20 mA
1000 V	0 V to 1200.00 V	6 mA

1 Output 125% of the range by using level ratio
2 At 1% to 120% of range, frequency is 1 kHz or less

Current Range and Range Generated

The LS3300 current ranges are 30 mA, 100 mA, 1 A, 10 A, 50 A, Ext Sensor (500 mV, 5 V).
Ext Sensor generates voltage that is equivalent to the output signal of the current sensor.
Current output values except for Ext Sensor are set using output level × level ratio, like the voltage source. For details on the output level and level ratio, see “Voltage Range and Range Generated” described earlier.
With Ext Sensor 500 mV or 5 V, a current equivalent to the current determined by output level × level ratio is generated. The Output Value column on the screen shows the current values calculated using output voltage × conversion ratio (sensor ratio).
The conversion ratio from voltage to current (sensor ratio) is set in mV/A.

Ext Sensor output current = Output level × level ratio × 1/sensor ratio

The maximum output at each current range is shown in the figure below. The maximum output is 125% of each current range rating.

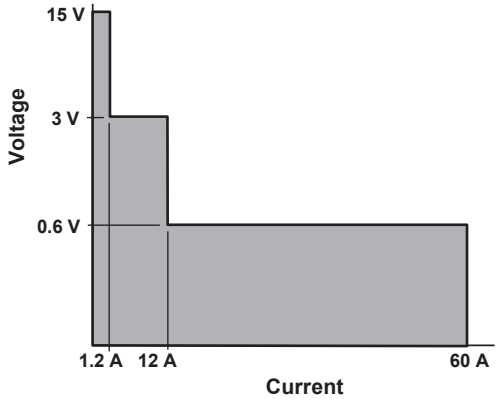

Range	Source Range[1]	Maximum Output[2]
30 mA	0 A to 36.0000 mA	15 V
100 mA	0 A to 120.000 mA	15 V
1 A	0 A to 1.20000 A	15 V
10 A	0 A to 12.0000 A	3 V
50 A	0 A to 60.000 A	0.6 V

1 Output 125% of the range by using level ratio
2 At 1% to 120% of range, frequency is 1 kHz or less

Turning the Output On and Off

You can turn the voltage and current outputs on and off separately or both at the same time.
If synchronous operation (wiring system not 1P2W) is being performed using synchronous communication, the output of the slave devices can be turned on and off from the master device (the output cannot be turned on and off from the slave devices).

High Current Output

You can synchronize the operation of multiple LS3300s and apply the AC current of the sum of the outputs of the synchronized LS3300s to the device to be calibrated.
By setting the master device’s wiring system to 1P2W (HI Current), you will be able to select 100 A and 150 A for the current output range.

Phase and Power Factor

The current lead or lag relative to voltage can be set using a phase or power factor.
If you set either the phase or power factor, the other is changed accordingly.
This is used to calibrate the power meter's phase or power factor.
The phase you set appears as an arrow on the screen.

Frequency

You can set the frequency of the output voltage or current as you like.
If several LS3300s are used in sync, slave devices also operated at the frequency set on the master device.

Range: 40 Hz to 1200 Hz

2.3 Sweeping

Sweeping is a function that varies the output smoothly in a specified range by changing the level ratio linearly over a specified time period. It can be used to check whether the needle is sticky when it moves. You can select the sweep time depending on the meter type. To sweep a meter with slow response, you can select a long sweep time to move the needle slowly.

Sweep range: 0 to 100%, 0 to 105%, 0 to 110%, 0 to 115%, 0 to 120% of the output level setting
Sweep time: 8 s, 16 s, 32 s, 64 s (time for the level ratio to change from 0% to 100%)

The LS3300 operates in the following manner depending on the level ratio or output value at the start of sweeping.

When the level ratio setting value at the start of sweeping is 0% (UP), upper sweep limit (DOWN)

The level ratio increases from 0% to the upper sweep limit or decreases from the upper sweep limit to 0%.

Up sweep

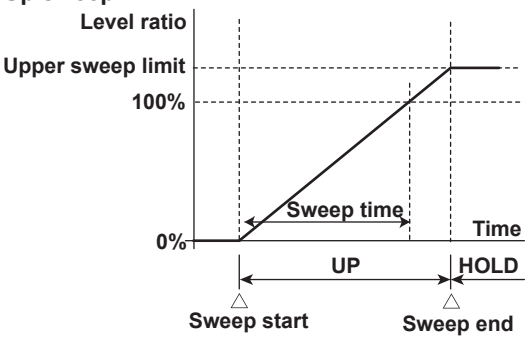

Down sweep

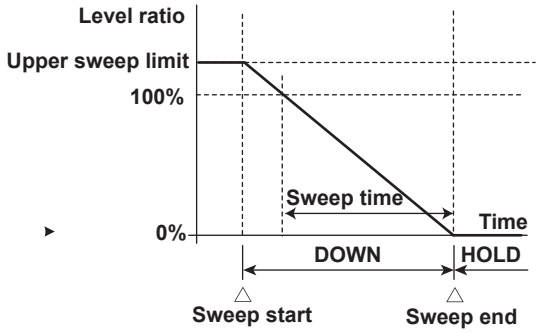

When 0% < level ratio setting value at the start of sweeping ≤ upper sweep limit

Sweeping starts with the initial value is used as the level ratio at the start of sweeping. When 0% or the upper sweep limit is reached, the level ratio is held.

Up sweep

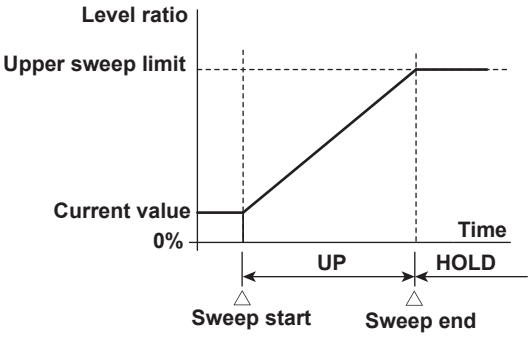

Down sweep

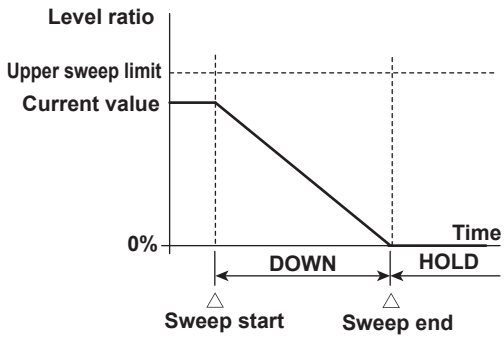

When upper sweep limit ≤ output value of the start of sweeping

In an up sweep, the level ratio of the start of sweeping is held. In a down sweep, the initial value is used as the level ratio at the start of sweeping, and the level ratio decreases with the same slope as when sweeping is performed from level ratio 100% to 0%.

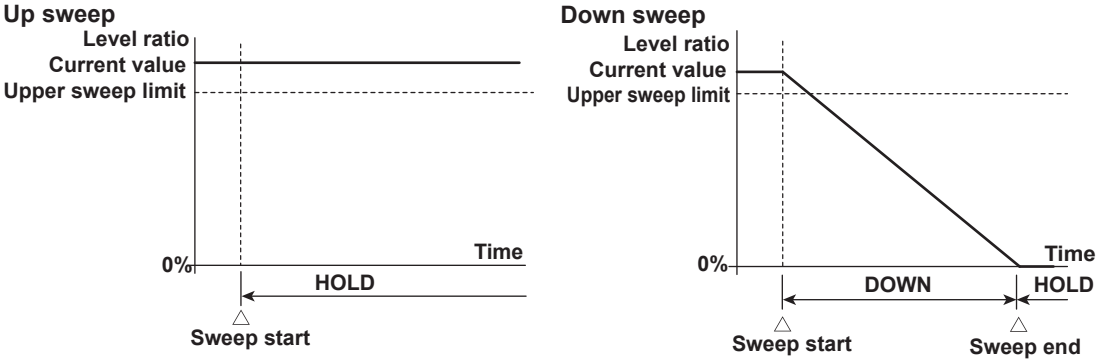

When (output level × level ratio) > 125% of range rating

The output value increases to 125% of range rating. The level ratio is held immediately before the output value exceeds 125% of range rating.

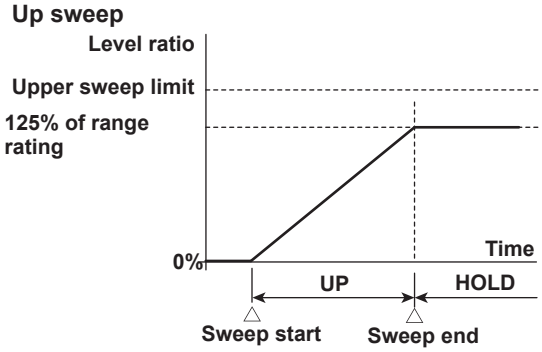

2.4 Synchronous Operation

This feature is used to connect several LS3300s together and output voltage or current in sync with the frequency of the master LS3300 or output voltage or current in sync with the frequency of another device.
When calibrating a power meter using a single-phase three-wire, three-phase three-wire, three-phase four-wire, or three-phase three-wire (three-voltage, three-current method) system, two or three LS3300s are connected and operated in sync as voltage sources and current sources.

External I/O Connection

To Operate Several LS3300s in Sync

Connect the signal output terminals (I and Q) on the rear panel of the master LS3300 to the external input terminals (I and Q) of the slave LS3300.

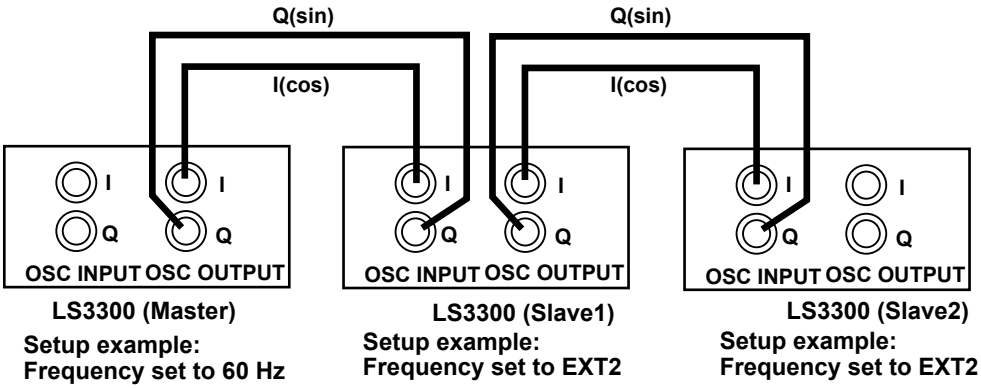

To Operate in Sync with an External Device

To operate the LS3300 in sync with a signal from a device other than an LS3300 (e.g., 2558A), you need to apply the sync signal from the device to the LS3300's external signal input terminal (OSC INPUT).

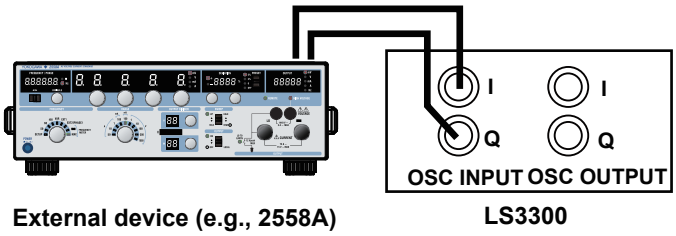

When operating several LS3300s in sync as described above, if a sync signal from a 2558A or other device is applied to the external signal input terminal (OSC INPUT) of the master LS3300, the LS3300s can operate in sync with the 2558A or other device (at the same frequency).
However, the phases are not synchronized. Measure the phase with a reference standard (e.g., YOKOGAWA WT3000), and adjust the phase manually.

Note

- If the phase or frequency of the input sync signal changes suddenly while outputting signals, the LS3300 may not be able to follow the input. In such a case, the output may turn off.
- To synchronize to an external signal, Oscillation must be set to External.

2.5 Wiring System

When several LS3300s are operated in sync, the LS3300 can output voltages and currents according to the following wiring systems.

- Single-phase two-wire (1P2W)
- Single-phase two-wire (1P2W HI Current)
- Single-phase three-wire (1P3W)
- Three-phase three-wire (3P3W)
- Three-voltage three-current method (3P3W (3V3A))
- Three-phase four-wire (3P4W)

Synchronous Communication

The output from slave devices can be controlled from a master device according to the wiring system.

When the UNIT2 and UNIT3 terminals on the rear panel of the master device is connected to the USB ports of the slave devices, the master device becomes UNIT1 and the slave devices UNIT2 and UNIT3.

The master device's voltage output is V1 and current output is I1. UNIT2's voltage output is V2 and current output is I2. UNIT3's voltage output is V3 and current output is I3.

If you change the master device's output or wiring system, the slave devices' outputs also change automatically. You cannot change the settings on the slave devices.

If the master device's wiring system is set to single-phase two-wire (1P2W), the slave devices will no longer be controllable from the master device, and you will be able to control them individually. When this takes place, each slave device retains the conditions set from the master device, so you can adjust the settings of each device and use it. If the settings specified from the master device are retained and the output of all UNITs is turned on, the output will be the same as that before the master device's wiring system was changed.

Connection Methods

Each LS3300 outputs voltage and current according to the wiring system of the LS3300s operating in sync.

In the case of a single-phase two-wire system, only a single LS3300 is necessary.

Controlling the Phase and Amplitude and Turning the Output On and Off from the Master Device

Balanced phase signals can be output by using synchronous communication between the master and slave devices.

Single-Phase Three-Wire, Three-Phase Three-Wire System (T phase reference), Single-Phase Two-Wire (high current 100 A range)

Connect the UNIT1's (master's) UNIT2 terminal to the UNIT2's (slave's) USB port.

Connect the UNIT1's (master's) signal output terminal to the UNIT2's (slave's) external signal input terminal.

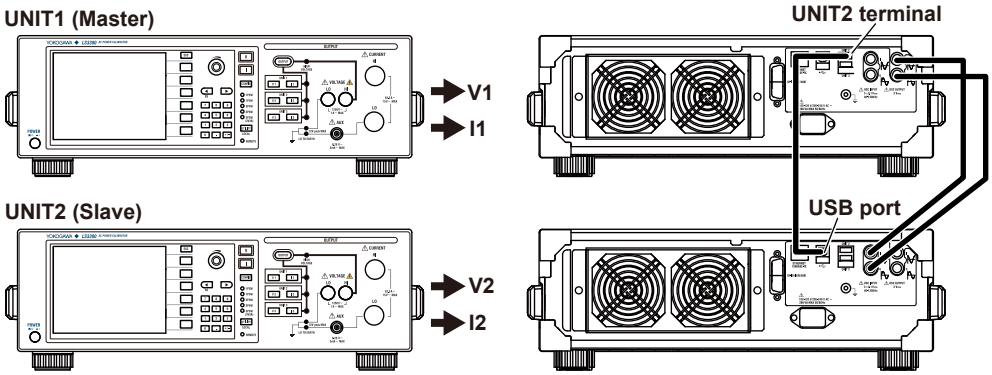

Single-Phase Three-Wire, Three-Phase Three-Wire (S phase reference), Single-Phase two-Wire (Hi current 100 A range) System

Connect the UNIT1's (master's) UNIT3 terminal to the UNIT3's (slave's) USB port.
Connect the UNIT1's (master's) signal output terminal to the UNIT3's (slave's) external signal input terminal.

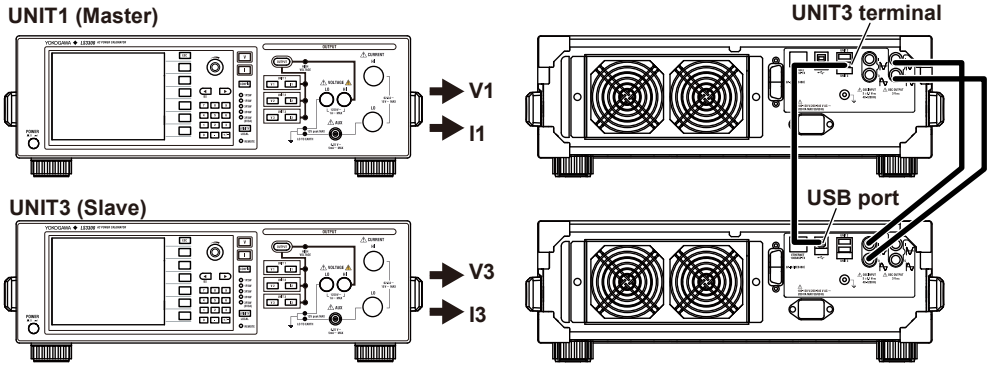

Three-Phase Three-Wire (Three-Voltage Three-Current Method), Three-Phase Four-Wire System, Single-Phase Two-Wire (high current 150 A range)

Connect the UNIT1's (master's) UNIT2 terminal to the UNIT2's (slave's) USB port.
Connect the UNIT1's (master's) UNIT3 terminal to the UNIT3's (slave's) USB port.
Connect the UNIT1's (master's) signal output terminal to the UNIT2's (slave's) external signal input terminal.
Connect the UNIT2's (slave's) signal output terminal to the UNIT3's (slave's) external signal input terminal.

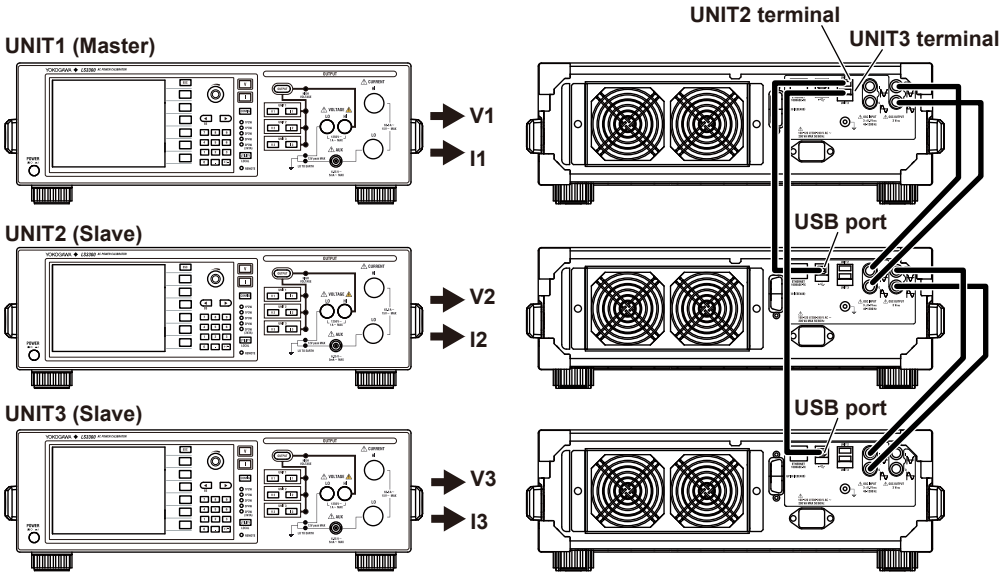

Note

If you want to change the wiring system to single-phase three-wire (S phase reference), three-phase three-wire (S phase reference), or single-phase two-wire (high current 100 A range) while keeping the wiring of the actual wiring system (see page 2-9) at three-phase three-wire (three-voltage three-current method), three-phase four-wire, or single-phase two-wire (high current 150 A range) and the priority unit set to UNIT3 (S phase reference), check that the reference signal of UNIT2 (slave device) is set to external signal (EXTernal). If the reference signal of UNIT2 (slave device) is set to internal signal (INTernal), UNIT3 (slave device) will not be able to synchronize with UNIT1 (master device).
If you use the adapter (BNC T 366923) to connect the units, UNIT3 (slave) can be synchronized to UNIT1 (master), regardless of the UNIT2 (slave) settings (see page 2-11).

Outputting Arbitrary Amplitude and Phase While Synchronizing the Output of Each Phase (Unbalanced output)

On the master and slave devices, set the wiring system to single-phase two-wire (1P2W). Set the Oscillation on slave devices to External.

Single-Phase Three-Wire, Three-Phase Three-Wire System

Connect the UNIT1's (master's) signal output terminal to the UNIT2's (slave's) external signal input terminal.

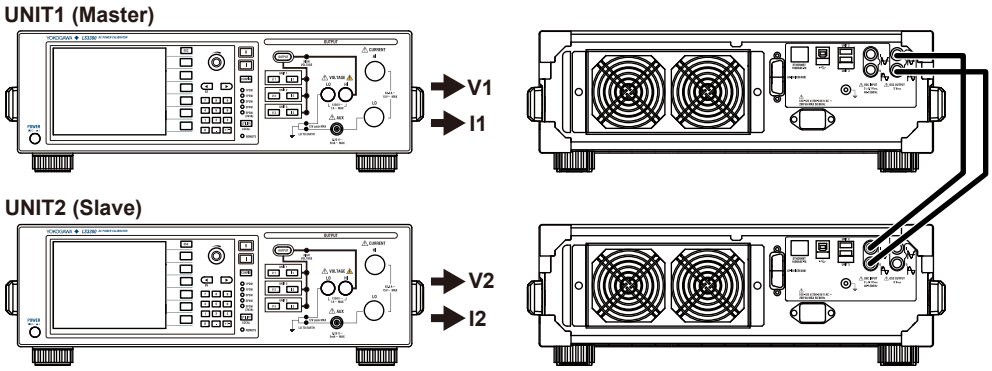

Three-Phase Three-Wire (Three-Voltage Three-Current Method), Three-Phase Four-Wire, Three-Phase Four-Wire System

Connect the UNIT1's (master's) signal output terminal to the UNIT2's (slave's) external signal input terminal.

Connect the UNIT2's (slave's) signal output terminal to the UNIT3's (slave's) external signal input terminal.

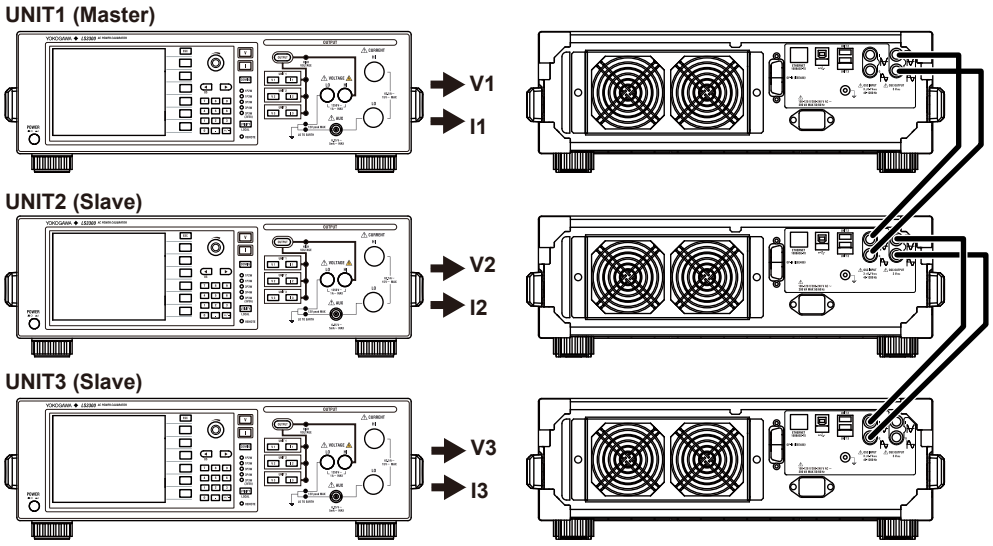

Even if the LS3300 is changed from a setting to output a three-phase balanced signal to a setting in which the master device's wiring system is set to single-phase two-wire (1P2W), each phase retains the balanced signal settings. As such, you can set the unbalanced signals based on the balanced signal settings.

When Using the 366923 Adapter (accessory sold separately)

When outputting three-phase three-wire, three-phase four-wire, or single-phase two-wire (high current 150 A range) signals using three LS3300s as shown in pages 2-9 and 2-10, UNIT3 (slave) will indirectly synchronize to UNIT1 (master) through UNIT2 (slave). As a result, if the UNIT2's reference signal is not set to external signal (EXTernal), UNIT3 cannot synchronize to UNIT1 (master).
If you use the 366923 adapter, the external output signal from the master device can be connected directly to two slave devices, so UNIT3 can synchronize to UNIT (master), regardless of the UNIT2 settings.

Connect the 366923 adapter to the UNIT2's (slave's) external signal input terminal.
Connect the UNIT1's (master's) signal output terminal to the UNIT2's (slave's) 366923 adapter.
Connect the UNIT3's (slave's) external signal input terminal to the UNIT2's (slave's) 366923 adapter.

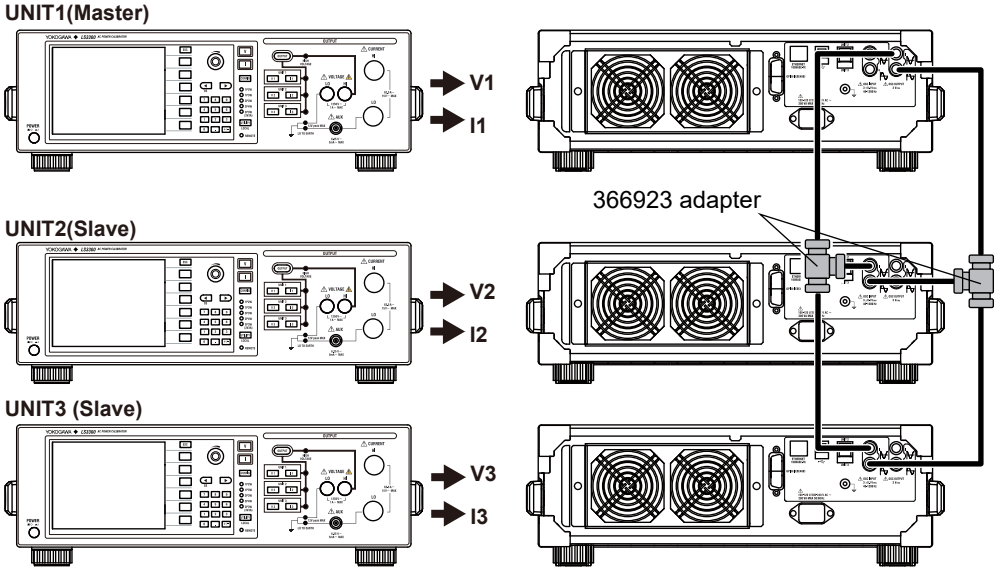

Note

Connect the 366923 adapter to the UNIT2's (slave's) signal input terminal. It cannot be connected to the UNIT1's (master's) signal output terminal.

2.6 Other Features

Turning the Beep Sound On and Off

Beeps are used to indicate the operation status of the device. You can turn it on and off from the UTILITY menu.
You can turn the beep sound on or off for the following notifications. You cannot change the volume.

- When an error is detected during a self-test executed at power-on or executed manually (error codes: E.911 to E950)
- When the voltage output is set to 150 V or higher
- When 150 V or a higher voltage is being output
- When a sweep operation is held

You cannot turn off the beep sound for the following notifications.

- When the cooling fan stops (error code: E.901)
- When an abnormal temperature is detected (error code: E.902, E.903)
- When an internal power supply error is detected (error code: E.904)
- When an internal circuit error is detected (error code: E.908)
- When a USB overcurrent is detected (error code: E.961)

Display Setting

You can turn off the LCD or adjust the brightness.
If the display is turned off, you can press any key to turn it back on.

Phase Display

You can set the direction of phase 0° for representing the voltage and current phases. You can select it from the UTILITY menu.

Type1: Phase 0° (reference signal phase) points to the right for all wiring systems.
Type2: Phase 0° (reference signal phase) points up for all wiring systems.

Error Log Display

The error log keeps a record of error codes that occur in communication and self-tests while the LS3300 is on. You can display the error log from the UTILITY menu. The error log is cleared when the power is turned off.

Initialization

You can initialize the LS3300 settings to their factory defaults. You can execute initialization from the UTILITY menu.
GP-IB and Ethernet settings are not initialized.
For a list of factory default settings, see appendix 5.

Product Information Display

You can view the firmware version, serial number, and so on. You can view the product information from the UTILITY menu.

- Serial number
- MAC address
- Firmware version
- Boot program version
- FPGA version
- Hardware version
- Remote information
  - GP-IB address
  - IP address
  - Subnet mask
  - Gateway
- Most recent adjustment date

3.1 Handling Precautions

Safety Precautions

If you are using the LS3300 for the first time, make sure to read “Safety Precautions,” on pages v to vii.

Do Not Remove the Case

Do not remove the case from the instrument. Some parts of the instrument use high voltages and are extremely dangerous. For internal inspection and adjustment, contact your nearest YOKOGAWA dealer.

Unplug If Abnormal Behavior Occurs

If you notice smoke or unusual odors coming from the instrument, immediately turn off the power and unplug the power cord. Also, turn off the power to the target device that are connected to the output terminals. Then, contact your nearest YOKOGAWA dealer.

Do Not Damage the Power Cord

Nothing should be placed on top of the power cord. The power cord should also be kept away from any heat sources. When removing the plug from the power outlet, do not pull on the cord. Pull from the plug. If the power cord is damaged or if you are changing the location where the instrument will be used, purchase a power cord that matches the specifications of the country or region that the instrument will be used in.

Correct the Problem If Output Is Automatically Turned Off

If an abnormality is detected in the internal circuit due to a voltage or current overloading, voltage or current output oscillation, and so on, the LS3300 will automatically turn off the output and display a warning message.
In the case of voltage output, remove the cause of the problem, such as the external load, and turn the output on again.
In the case of current output, remove the cause of the problem, such as the external load, short the current terminals, and turn the output on again.
If the output still turns off after you have corrected the problem, the LS3300 may be malfunctioning. Contact your nearest YOKOGAWA dealer.

Turn the Power Switch Off If Overheat is Detected

If internal overheating is detected due to a fan malfunction and the like, the LS3300 will automatically turn off the output, display an error code, and beep intermittently. If this happens, immediately turn the power switch off. Check that the inlet or outlet holes for the cooling fan are not blocked and that there is adequate space around the LS3300. Check for and remove any foreign objects that are caught in the filter on the rear panel. If the same error code appears when you turn the power switch on after waiting at least an hour, the LS3300 may be malfunctioning. Contact your nearest YOKOGAWA dealer.

General Handling Precautions

Do Not Place Objects on Top of the Instrument

Never place other instruments or any objects containing water on top of the instrument. Doing so may damage the instrument. For details on stacking the LS3300, see section 3.2.

Keep Electrically Charged Objects Away from the Instrument

Keep electrically charged objects away from the input and output terminals. They may damage the internal circuitry.

Unplug during Extended Non-Use

Turn off the instrument and remove the power cord from the outlet.

When Carrying the Instrument

Use two people to carry this instrument. Firmly hold the handles on the side of the case. The instrument weighs approximately 20 kg (the center of gravity is somewhat toward the back). Be careful of injury.
In addition, be sure to turn off the power switch and remove the power cord and other connected cables before carrying the instrument.

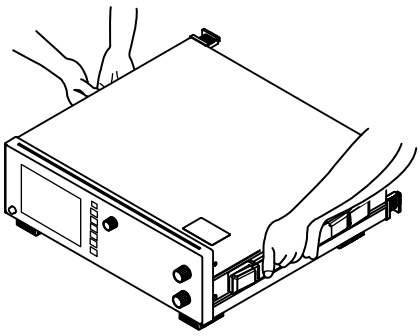

When Cleaning the Instrument

When cleaning the case or the operation panel, turn the instrument and remove the instrument's power cord from the outlet. Then, wipe the instrument lightly with a clean dry cloth. Do not use chemicals such as benzene or thinner. Doing so may cause discoloring and deformation.

3.2 Installing the Instrument

WARNING

- Do not install the instrument outdoors or in locations subject to rain or water.
- Install the instrument so that you can immediately remove the power cord if an abnormal or dangerous condition occurs.

CAUTION

If you block the outlet holes on the top and bottom or the inlet holes on the rear of the instrument, the instrument will become hot and may break down.

French

AVERTISSEMENT

- Ne pas installer l'instrument à l'extérieur ou dans des lieux exposés à la pluie ou à l'eau.
- Installer l'instrument de manière à pourvoir immédiatement le débrancher du secteur en cas de fonctionnement anormal ou dangereux.

ATTENTION

Si vous bloquez les orifices de sortie sur le dessus ou le dessous de l'équipement ou les orifices d'entrée à l'arrière de l'équipement, ce dernier s'échauffe et risque de tomber en panne.

Installation Conditions

Install the instrument in a place that meets the following conditions.

Well-Ventilated Location

Outlet holes are located on the top and bottom of the instrument. There are also inlet holes on the rear. To prevent internal overheating, allow for enough space around the instrument (see the figure below), and do not block the inlet and outlet holes.

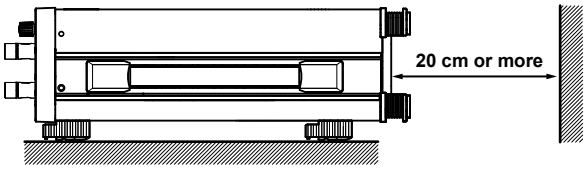

When connecting cables, allow for enough space, above and beyond the space shown in the figure above, to carry out the procedure.

Ambient temperature and humidity

Ambient temperature	5°C to 40°C
Ambient humidity	20% RH to 80% RH (no condensation)

Note

Condensation may form when the instrument is moved from a low temperature or humidity environment to a high temperature or humidity environment, or when there is a sudden change in temperature. In such cases, before you use the instrument, allow it to adjust to the surrounding temperature for at least an hour.
If you transport the instrument in its packing box, to prevent condensation, allow it to adjust to the new ambient temperature for at least an hour before taking it out of the box.

Installation Orientation

Desktop

Install the instrument on a stable surface that is level in all directions and that is not slippery.
The supplied rubber stoppers can be attached to the feet at the rear of the instrument to prevent the instrument from sliding. You can install the instrument in a tilted position using the movable legs.

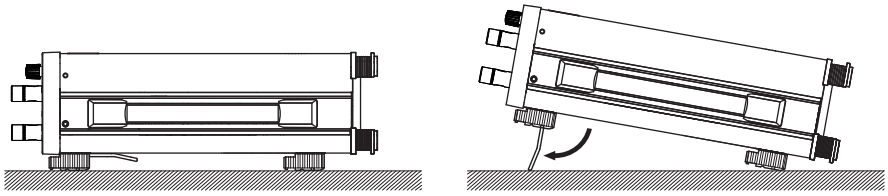

WARNING

- Do not adjust the movable legs in an unstable condition.
- Do not place the instrument in any position other than those shown in the above figures.
- Do not stack the instruments with the movable legs pulled out.
- Only one instrument can be stacked on top of another. Do not stack multiple instruments on top of one instrument.

French

AVERTISSEMENT

- Ne pas manipuler les pieds escamotables lorsque l’instrument est instable.
- Ne pas placer l’instrument dans des positions autres celles indiquées ci-dessus.
- Ne pas empiler des instruments lorsque les pieds escamotables sont sortis.
- Seul un instrument peut être empilé sur un autre instrument. Ne pas empiler plusieurs instruments les uns sur les autres.

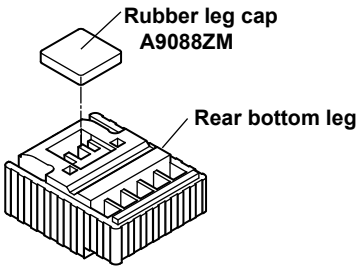

Note

If you attach the front rubber leg cap, you will not be able to stack the LS3300.

Rack Mounting

To rack-mount the instrument, use the separately sold rack mount kit.

Item	Model
Model 751535-E3 Rack mount kit (for mounting one LS3300 on an EIA standard rack)	751535-E3
Model 751535-J3 Rack mount kit (for mounting one LS3300 on a JIS standard rack)	751535-J3

An outline of the mounting procedure is given below. For detailed instructions, see the manual that is included with the rack mount kit.

1. Remove the handles from both sides of the instrument.
2. Remove the four feet from the bottom of the instrument.
3. Remove the four seals covering the rack mount attachment holes. The holes are on the sides of the instrument near the front.
4. Place seals over the feet and handle attachment holes.
5. Attach the rack mount kit to the instrument.
6. Mount the instrument on a rack.

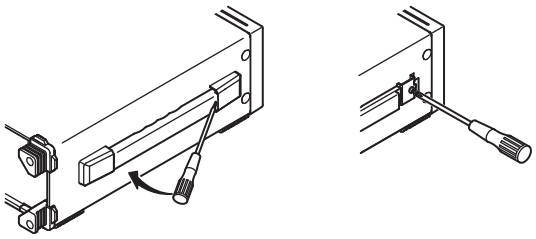

How to remove a handle cover

Note

- When rack-mounting the instrument, allow at least 5cm of space around the top and bottom panel outlet holes to prevent internal heating. Allow at least 20 cm around the rear panel inlet holes.
- Make sure to provide adequate support from the bottom of the instrument. The support should not block the inlet and outlet holes.
- Store the removed parts in a safe place.
- When rack-mounting the instrument, remove the feet from the rear of the instrument if they are coming into contact with the rack and are thus preventing you from rack-mounting the instrument. After you have rack-mounted the instrument, re-attach the feet to the rear of the instrument.
- The knob and current terminals protrude further out than the front panel position. Make sure you do not hit them against the rack when mounting the instrument.

Do Not Install the Instrument in the Following Kinds of Places

- In direct sunlight or near heat sources
- In an environment with excessive amounts of soot, steam, dust, or corrosive gas
- Near strong magnetic field sources
- Near high-voltage equipment or power lines
- In an environment subject to large levels of mechanical vibration
- On an unstable surface
- Outdoors or in locations subject to rain or water

3.3 Connecting to the Power Supply

Before Connecting the Power Supply

Make sure to follow the warnings below when connecting the power supply. Failure to do so may cause electric shock or damage to the instrument.

WARNING

- Before connecting the power cord, ensure that the source voltage matches the rated supply voltage of the instrument and that it is within the maximum rated voltage of the power cord.
- Connect the power cord after checking that the power switch of the instrument is turned off.
- To prevent electric shock and fire, use a power cord that complies with the specifications of the country or region that the instrument will be used in.
- Make sure to connect protective earth grounding to prevent electric shock. Connect the power cord to a three-prong power outlet with a protective earth terminal.
- Do not use an ungrounded extension cord. If you do, the instrument will not be grounded.
- If an AC outlet that conforms to the power cord is unavailable and you cannot ground the instrument, do not use the instrument.

French

AVERTISSEMENT

- Avant de brancher le cordon d'alimentation, vérifier que la tension source correspond à la tension d'alimentation nominale de l'instrument et qu'elle est compatible avec la tension nominale maximale du cordon d'alimentation.
- Brancher le cordon d'alimentation après avoir vérifié que l'interrupteur d'alimentation de l'instrument est sur OFF.
- Pour éviter les risques d'incendie et d'électrocution, utilisez uniquement un cordon d'alimentation conforme aux normes du pays ou de la région où vous utilisez cet équipement.
- Relier l'instrument à la terre pour éviter tout risque de choc électrique. Brancher le cordon d'alimentation sur une prise de courant à trois plots reliée à la terre.
- Toujours utiliser une rallonge avec broche de mise à la terre, à défaut de quoi l'instrument ne serait pas relié à la terre.
- En l'absence de prise secteur conforme au cordon d'alimentation et dans l'impossibilité de mettre l'instrument à la terre, ne pas utiliser l'instrument.

Connecting the Power Cord

1. Check that the power switch (POWER) on the front panel of the instrument is turned off.
2. Connect the power cord plug to the power inlet on the rear panel.
3. Connect the other end of the cord to an outlet that meets the following conditions. Use a grounded three-prong outlet.

Item	
Rated supply voltage*	100 VAC to 120 VAC, 200 VAC to 240 VAC
Permitted supply voltage range	90 VACto 132 VAC, 180 VAC to 264 VAC
Rated supply frequency	50 Hz/60 Hz
Permitted supply frequency range	48 Hz to 63 Hz
Maximum power consumption	Approx. 200 VA

* This instrument can use a 100 V or a 200 V power supply. The maximum rated voltage differs according to the type of power cord. Before you use the instrument, check that the voltage supplied to it is less than or equal to the maximum rated voltage of the power cord.

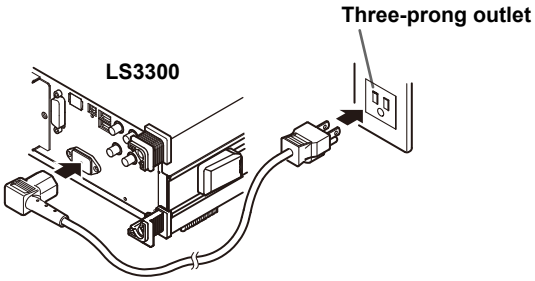

3.4 Turning On and Off the Power Switch

Before Turning On the Power, Check That:

- The instrument is installed properly. → section 3.2, “Installing the Instrument”
- The power cord is connected properly → section 3.3, “Connecting to the Power Supply”

Power Switch Location

The power switch is located in the lower left of the front panel.

Turning On and Off the Power Switch

The power switch is a push button. Press the button once to turn the instrument on and press it again to turn the instrument off.

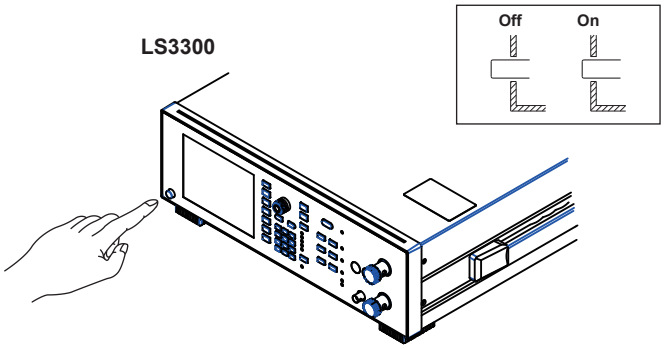

Operations Performed When the Power Is Turned On

When the power switch is turned on, a self-test starts automatically.
When the self-test completes successfully, the instrument will be configured with the settings that were in use immediately before the power was turned off.
For the settings that are retained even when the power is turned off, see appendix 2.
Before using the instrument, make sure that the self-test completes successfully.

Note

- After turning the power switch off, wait at least 10 seconds before you turn it on again.

When the Power-on Operation Does Not Finish Normally

- If the instrument does not operate as described above when the power switch is turned on, turn the power switch off, and then:
  - Check that the power cord is securely connected.
  - The correct voltage is coming to the power outlet. → section 3.3, “Connecting to the Power Supply”
  - Initialize the instrument. See section 6.5.
- If the instrument still does not work properly, contact your nearest YOKOGAWA dealer for repairs.
- If an error code is displayed, check the information in section 13.2, and take the appropriate actions.

To Generate Accurate Output

- Allow the instrument to warm up for at least 30 minutes after turning on the power switch. If the instrument has been stored in a hot-temperature, high-humidity environment, warm up the instrument for at least a day before starting use.
- Keep the OUTPUT switch turned off during warm-up.
  After warm-up is complete, turn the OUTPUT switch on.

Operations Performed When the Power Is Turned Off

After the power is turned off, the instrument stores the setup parameters in its memory before shutting down. The same is true when the power cord is disconnected from the outlet. The next time the power is turned on, the instrument powers up using the stored settings (for the settings that are stored, see appendix 2).

CAUTION

Do not turn off the power when the instrument's output is turned on. Doing so can damage the LS3300. It can also cause damage to the devices connected to the LS3300. Turn the output off first, and the turn off the power.

French

ATTENTION

Ne pas tourner l'appareil hors tension quand la sortie de l'instrument est activée. Cela peut endommager le LS3300. Il peut aussi endommager les appareils connectés à la LS3300. Tourner la sortie première et la coupez l'alimentation.

3.5 Wiring Precautions

WARNING

This product generates high voltage. Be careful of electric shock and electric discharge. To prevent electric shock, remove rings, watches, and other metallic accessories and jewelry before wiring.

Before Wiring

- Ground the instrument before connecting the instrument to the target device. The power cord for this instrument is a three-prong type power cord. Insert the power cord into a grounded three-prong outlet.
- Be sure to turn off the output before connecting or disconnecting the target device.
- If a large capacitive load or oscillating circuit is connected to the voltage terminals, the output may oscillate and cause high voltage to appear at the voltage output terminals. If the output oscillates, turn it off immediately.
- If a large inductive load or oscillating circuit is connected to the current terminals, the output may oscillate and cause high voltage to appear at the current output terminals. If the output oscillates, turn it off immediately.

Wiring

- Make sure to fasten the output terminal screws securely so that cables do not come loose.
- Only use cables whose conductive parts are covered for connecting to the voltage output terminals. Exposed conductive parts can lead to electric shock.
- Do not use cables whose conductive parts are exposed due to tears in the insulation or broken cables as they may lead to a short circuit or electric shock.
- For connecting to terminals used for voltage output, only use cables that have safety terminals that cover their conductive parts. Using a terminal with bare conductive parts (such as a banana plug) can be dangerous if the terminal comes loose.
- Do not use the fork terminal adapter 758921 when outputting from the voltage output terminals. Due to the structure of the product, it is possible to touch the metal parts of the fork terminal adapter 758921. Be careful as this constitutes an electric shock hazard.
- Use the accessories of this product within the rated range of each accessory (see page iv). When using several accessories together, use them within the specification range of the accessory with the lowest rating.

Before output (before turning on the output), check that:

- Cables are connected to the instrument's output terminals correctly.
- Cables are connected to the target device correctly.
  Cables are not shorted because of wiring errors, broken insulation of lead wires, unintended contact with conductive parts, and so on.
- Cables are fastened firmly to the terminals.
- There no problems with the terminals, such as the presence of foreign substances.

During output (do not touch the terminals or the connected cables when this instrument is on), check that:

- There no problems with the terminals, such as the presence of foreign substances.
- The terminals are not abnormally hot.
  The terminal connections may become loose over time. If this happens, heat may be generated due to changes in contact resistance. Periodically check that the cables are firmly connected to the terminals. Be sure to turn off both this instrument and the target device before you check the connections.
- If the voltage output exceeds 33 Vrms or 46.7 Vpeak, there is a danger of electric shock due to the high voltage. Be extremely careful.

After output (immediately after the output is turned off)

After you output a voltage or current, voltage may remain for some time even after you turn the output off. This residual voltage may lead to electric shock. Do not touch the terminals immediately after you turn the output off. The amount of time that voltage remains varies depending on the target device.

CAUTION

- Use cables that have adequate margins of withstand voltage and current capacity with respect to the voltage or current to be sourced.
  Example: To use a current of 20 A, use copper wires that have a conductive cross-sectional area of 4 mm^2 or greater.
- When outputting current, do not open the current terminals. Doing so will trigger a protection feature, and the output will turn off.
- When outputting voltage, do not short the voltage terminals. Doing so will trigger a protection feature, and the output will turn off.
- Use twisted-pair cables to prevent oscillation.
- Abnormal voltage may appear at the LS3300 output terminals when you turn off the LS3300. Turn the output off first, and the turn off the power.
- Do not connect an external voltage source or current source with a frequency or phase different from the LS3300 setting to the output terminals. Doing so may damage the LS3300.

To generate accurate voltage and current, note the following items.

- If high voltage and low current are output simultaneously, the effect of the magnetic field from the high voltage may cause errors in the current source. Twist each of the voltage and current output cables together, and run the cables so as to minimize this effect.
- If high current and low voltage are output simultaneously, the effect of the magnetic field from the high current may cause errors in the voltage source. Twist each of the voltage and current output cables together, and run the cables so as to minimize this effect.
- When connecting the power meter's external current sensor input connectors to the AUX terminals, remove the cables connected to the current input terminals.

French

AVERTISSEMENT

Ce produit génère une tension élevée. Faites attention au choc électrique et à la décharge électrique. Afin d'éviter tout choc électrique, retirer les bagues, les montres et autres accessoires métalliques ainsi que les bijoux avant le câblage.

Avant le câblage

- Relier l'instrument à la terre avant de le brancher sur l'appareil cible. Le cordon d'alimentation à utiliser est un cordon d'alimentation à trois broches. Brancher le cordon d'alimentation sur une prise de courant à trois plots mise à la terre.
- Toujours mettre hors tension avant de brancher ou de débrancher l'appareil cible.
- En cas de branchement d'une importante charge capacitive ou de circuit oscillant sur les bornes de tension, la sortie peut osciller et entraîner l'alimentation d'une tension élevée sur les bornes de sortie de tension. En cas d'oscillation de la sortie, mettre immédiatement hors tension.
- En cas de branchement d'une importante charge inductive ou de circuit oscillant sur les bornes de courant, la sortie peut osciller et entraîner l'alimentation d'une tension élevée sur les bornes de sortie de tension. En cas d'oscillation de la sortie, mettre immédiatement hors tension.

Câblage

- Serrez bien les vis des bornes de sortie de telle sorte que les câbles en plomb ne se détachent pas.
- Utiliser seulement des câbles dont les pièces conductrices sont recouvertes pour un raccordement aux bornes de sortie de tension. Des pièces conductrices exposées peuvent entraîner une choc électrique.
- N'utilisez pas de câble de plomb dont les pièces conductrices sont exposées, en raison de traces d'usure de l'isolation ou de câbles cassés, car ceci risque d'entraîner un court-circuit ou un choc électrique.
- Pour le raccordement à des bornes utilisées pour une sortie de tension, utiliser uniquement des câbles en plomb présentant des bornes de sécurité recouvrant leurs pièces conductrices. L'utilisation d'une borne dotée d'éléments conducteurs nus (comme une fiche banane) serait dangereuse si la borne venait à se détacher.
- Ne pas utiliser l'adaptateur 758921 à la sortie des bornes de sortie de tension. Compte tenu de la structure du produit, il est possible de toucher les pièces métalliques de l'adaptateur de borne à fourche 758921. Procédez avec soin, car cette opération présente un risque de choc électrique.
- Utilisez les accessoires de ce produit en fonction des valeurs nominales de chacun (reportez-vous à la page iv). Lorsque vous employez plusieurs accessoires en même temps, utilisez les valeurs de l'accessoire ayant les valeurs nominales les plus faibles.

Avant le sortie (avant la mise sous tension), vérifier que :

- Les câbles en plomb sont correctement raccordés aux bornes de sortie de l'équipement.
- Les câbles en plomb sont correctement raccordés à l'appareil cible.
  Les câbles en plomb ne sont pas court-circuités en raison d'erreurs de câblage, d'absence d'isolation des câbles en plomb, de contact accidentel avec des pièces conductrices etc.
- Les câbles sont fermement vissés sur les bornes.
- Les bornes ne présentent aucune anomalie, telle la présence de corps étrangers.

Pendant la sortie (ne pas toucher les bornes ni les câbles branchés lorsque l'instrument est sous tension), vérifier que :

- Les bornes ne présentent aucune anomalie, telle la présence de corps étrangers.
- Les bornes ne chauffent pas anormalement.
  Les raccordements de bornes risquent de se détacher dans le temps. Le cas échéant, une chaleur peut être générée suite aux changements de résistance au contact. Vérifiez régulièrement que les câbles en plomb sont bien raccordés aux bornes. Éteignez bien à la fois cet équipement et l'appareil cible avant de vérifier les raccordements.
- Si la sortie de tension dépasse 33 Vrms ou 46,7 Vpic, il existe un risque de choc électrique dû à la tension élevée. Soyez extrêmement attentif.

Après la sortie (tout de suite après la mise hors tension)

Une fois une tension ou un courant obtenu(e), la tension peut rester un certain temps, même après la mise hors tension. Cette tension résiduelle peut entraîner un choc électrique. Ne touchez pas immédiatement les bornes après la mise hors tension. La durée pendant laquelle le tension reste varie en fonction de l'appareil cible.

ATTENTION

- Utiliser des câbles qui ont suffisamment de marge de tension de maintien ou de capacité de courant par rapport à la tension ou au courant à émettre.
  Exemple : Pour utiliser un courant de 20 A, utilisez des câbles en cuivre présentant une section de coupe transversale conductrice de 4 mm^2 ou plus.
- Lorsqu'un courant est délivré, n'ouvrez pas les bornes de courant. Ceci risquerait de déclencher une option de protection et de couper la sortie.
- Lorsqu'une tension est délivrée, ne court-circuitez pas les bornes de tension. Ceci risquerait de déclencher une option de protection et de couper la sortie.
- Utiliser une paire torsadée de câbles pour éviter l'oscillation.
- Peut cause de tension anormale de sortie quand désactiver LS3300. LS3300 sortie éteint et puis désactiver le LS3300.
- Aux bornes de sortie, ne connectez pas une source de tension externe ou une source de courant avec une fréquence ou une phase différente du réglage du LS3300. Cela pourrait endommager le LS3300.

3.6 Connecting Cables

Connect cables from the target device to the voltage or current terminals.
To prevent electric shock and damage to the instrument, follow the warnings given in section 3.5, “Wiring Precautions.”

Voltage Terminals

The terminals are safety banana jacks (female) that are 4 mm in diameter.
Only insert safety terminals whose conductive parts are not exposed into the voltage terminals.

Wiring Example for Calibrating a Voltmeter or Frequency Meter

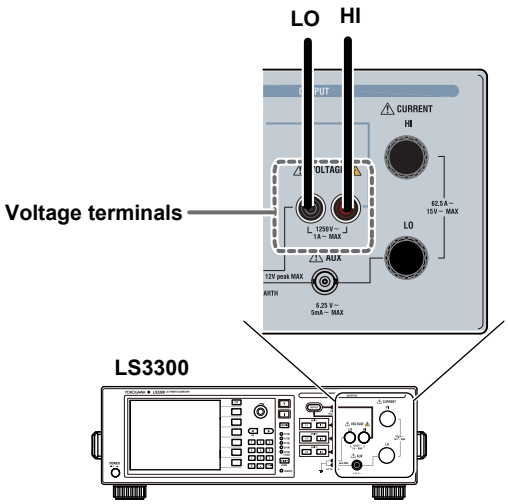

Current Terminals

The terminals are binding posts. The fastening screws are M6. Either wind the wire around the screw or pass a crimped terminal through the screw hole, and then tighten the terminal knob firmly with your hand.
The terminal knob may break if you apply excessive torque.

Wiring Example for Calibrating a Ammeter

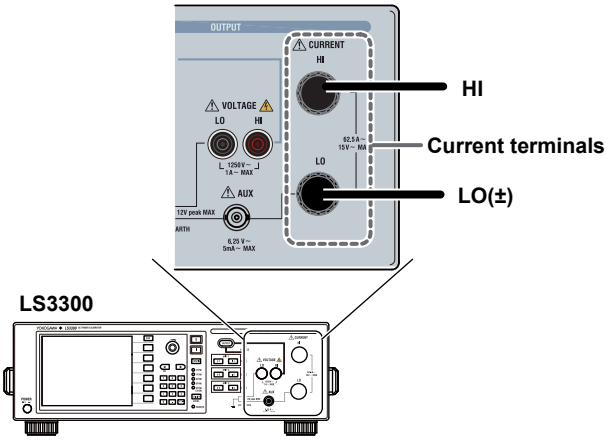

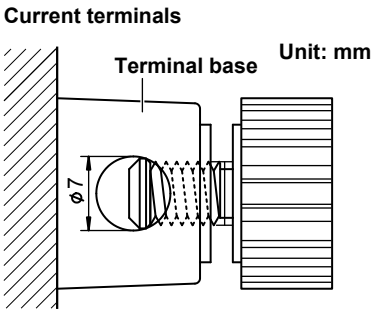

CAUTION

- Confirm that no foreign materials are caught in the contact area between the current terminal and the cable.
- Periodically confirm that the current terminals are not loose and that there are no foreign materials caught in the contact area between the current terminal and the cable.

French

ATTENTION

- Vérifier l'absence de corps étrangers dans la zone de contact entre la borne de courant et le câble.
- Vérifier régulièrement que les bornes de courant sont bien serrées et qu'il n'y a aucun corps étranger dans la zone de contact entre la borne de courant et le câble.

Connecting to a Round Crimped Terminal

To connect a cable with a round crimped terminal to a current terminal, follow the procedure below.

1. Turn the current terminal knob to remove it.

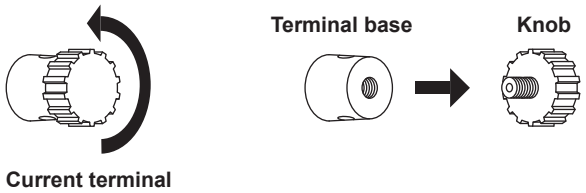

2. Insert the screw of the knob into the crimped terminal, and then tighten the terminal knob firmly with your hand. The terminal knob may break if you apply excessive torque.

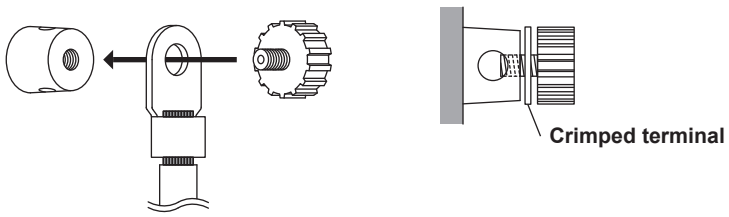

AUX Terminal

The terminal is a coaxial connector. Use the BNC cable accessory (sold separately) to connect to it. This terminal is used when you set the current range to Ext Sensor (current sensor signal).

4.1 Setting the Output Voltage

Procedure

When using the LS3300 individually, set the wiring system to single-phase two-wire (1P2W or 1P2W (HI Current)) (see chapter 5).

1. On the top menu, press the **V** soft key or the **V** key.

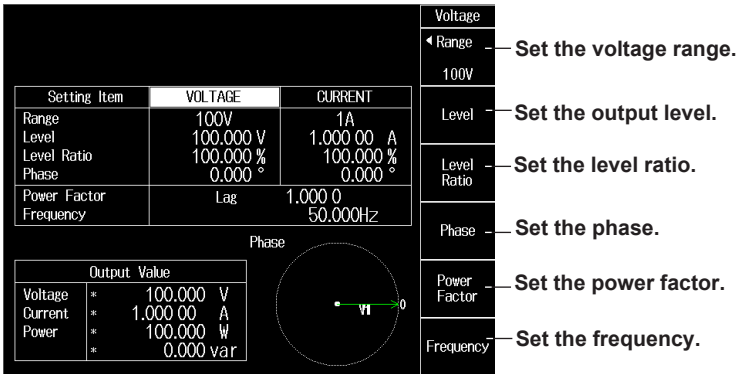

Setting the Voltage Range

2. Press the **Range** soft key. Available options are displayed.
   Press the soft key corresponding to the voltage range you want to select.

Setting the Output Level

3. Press the **Level** soft key to display the level setup screen.
4. Use the left and right **arrow keys** to move between digits and the **knob** to set the output level.
   When setting the value directly using the numeric keypad, units are displayed on the soft key menu, so press the appropriate unit soft key. The setting is confirmed.
   The output level can be set up to 120% of the range.

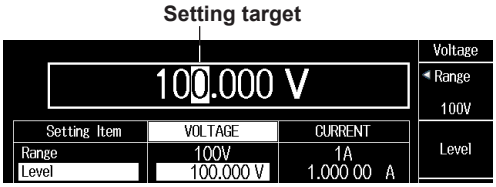

Setting the Level Ratio

5. Press the **Level Ratio** soft key to display the level ratio setup screen.
6. Use the left and right **arrow keys** to move between digits and the **knob** to set the level ratio.
   When setting the value directly using the numeric keypad, units are displayed on the soft key menu, so press the appropriate unit soft key. The setting is confirmed.
   The level ratio can be set up to 120%. However, values that would cause output level × level to exceed 125% of the voltage range are not allowed.

Setting the Phase

For a single-phase two-wire system (1P2W or 1P2W (HI Current)) only, set the voltage and current phases separately. For other wiring systems, set the phase of the phase current relative to the phase voltage.

7. Press the **Phase** soft key to display the phase setup screen.
8. Use the left and right **arrow keys** to move between digits and the **knob** to set the voltage phase relative to the reference signal.
   When setting the value directly using the numeric keypad, units are displayed on the soft key menu, so press the appropriate unit soft key. The setting is confirmed.

Setting the Power Factor (Shared with the current setting)

9. Press the **Power Factor** soft key to display the power factor setup screen.

10. Use the left and right **arrow keys** to move between digits and the **knob** to set the power factor. When setting the value directly using the numeric keypad, units are displayed on the soft key menu, so press the appropriate unit soft key. The setting is confirmed.

11. Press the **Power Factor** soft key again. A menu for setting the lead and lag of power factor appears.

12. To make the current waveform lead the voltage waveform, press the Lead soft key. Otherwise, press the Lag soft key.

Setting the Frequency (Shared with the current setting)

13. Press the **Frequency** soft key to display the frequency setup screen.

14. Use the left and right **arrow keys** to move between digits and the **knob** to set the frequency. When setting the value directly using the numeric keypad, units are displayed on the soft key menu, so press the appropriate unit soft key. The setting is confirmed.

Explanation

Voltage Range

The selectable voltage ranges are as follows:

Voltage Range	Output Range	Resolution
1 V	0.00000 to 1.25000 V	10 μV
10 V	0.0000 to 12.5000 V	100 μV
30 V	0.0000 to 37.5000 V	100 μV
100 V	0.000 to 125.000 V	1 mV
300 V	0.000 to 375.000 V	1 m V
1000 V	0.00 to 1250.00 V	10 mV

Output Level

The output level can be set up to 120% of the voltage range. If output level × level ratio is set to a value exceeding 125% of the voltage range, the level ratio is changed automatically so that output level × level ratio is at 125% of the voltage range.

Level Ratio

Set the percentage of the output level to output. The range is 0 to 120%.
You can change the output value in steps by changing the level ratio.
For example, when the output level is 30 V, voltage output of 0 V, 7.5 V, 15 V, 22.5 V, and 30 V can be achieved by setting the level ratio to 0%, 25%, 50%, 75%, and 100%, respectively.
Values that would cause output level × level to exceed 125% of the voltage range are not allowed.

Voltage Output Level and Voltage Output

The voltage output level and voltage output that the LS3300 delivers are as follows:

Voltage output level = output level × level ratio

Voltage output = $\sqrt{2}$ × voltage output level × sin(2π × frequency × t + voltage phase)

t: Time

Phase

When the wiring system is single-phase two-wire (1P2W or 1P2W (HI Current)), set the voltage phase relative to the reference signal. For other wiring systems, set the phase difference of the current relative to each phase voltage.
If you change the phase in the counterclockwise direction, the phase is expressed from 0 to 359.999°.
If you change the phase in the clockwise direction, the phase is expressed from 0° to -180.000° and 179.999° to 0°.

Power Factor

Set the power factor in the range of –1.0 to 0 to 1.0 along with lead or lag.
The power factor is calculated from the following equation.

Power factor = cos (current phase – voltage phase)

As such, because the power factor is the same when (current phase – voltage phase) is between 0° and 180° and between 0° and -180°, power factor by itself cannot be used to determine (current phase – voltage phase).
The LS3300 considers (current phase – voltage phase) in the range of 0° to 180° to be lead, and that in the range of 0° to -180° to be lag and uses the combination of the power factor and lead and lag to determine (current phase – voltage phase).

Setting the Lead and Lag

Set the lead direction and lag direction of the power factor.

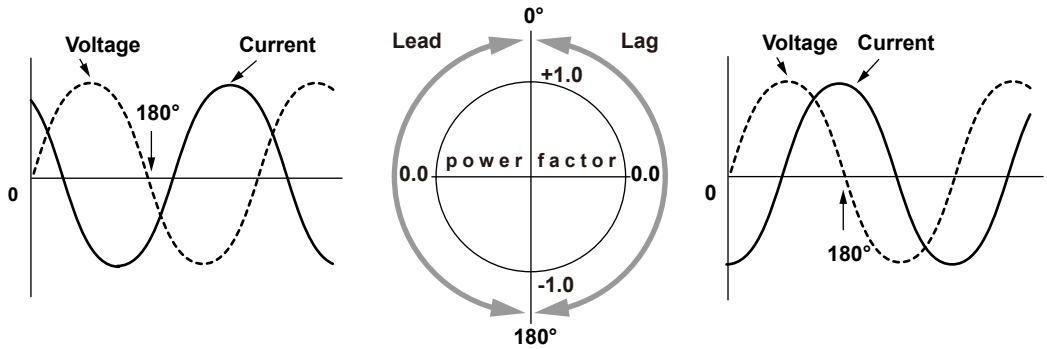

Frequency

Set the output voltage/current frequency in the range of 40 to 1200 Hz.
When operating in sync with another device, the signal is output at the frequency received from the reference device. For details, see chapter 5.

4.2 Setting the Output Current

Procedure

When using the LS3300 individually, set the wiring system to single-phase two-wire (1P2W).
If you want to output current exceeding 50 A by synchronizing the operation of several LS3300s, see section 5.4.

1. On the top menu, press the **I** soft key or the **I** key.

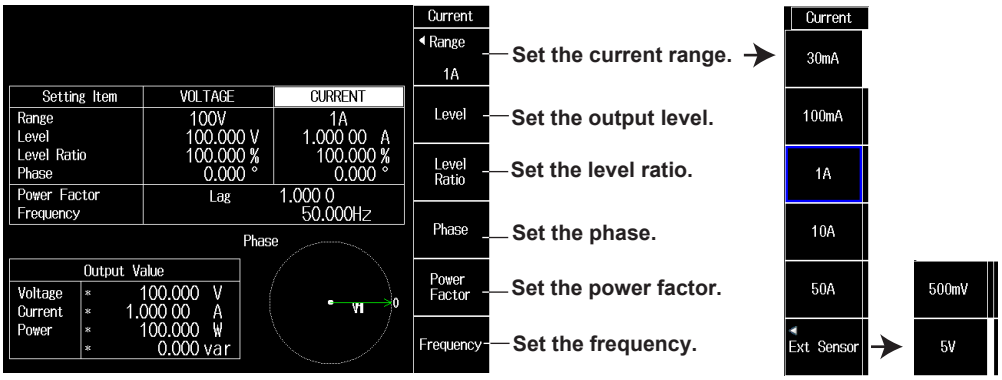

Setting the Current Range

2. Press the **Range** soft key. Available options are displayed.
   Press the soft key corresponding to the current range you want to select.
   To output current sensor signals, press the Ext Sensor soft key. The range for the current sensor signal appears. Select the range according to the current sensor output.

Setting the Output Level

3. Press the **Level** soft key to display the level setup screen.
4. Use the left and right **arrow keys** to move between digits and the **knob** to set the output level.
   When setting the value directly using the numeric keypad, units are displayed on the soft key menu, so press the appropriate unit soft key. The setting is confirmed.
   The output level can be set up to 120% of the range.

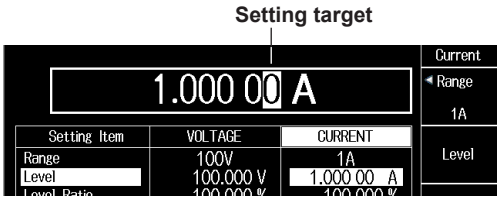

Setting the Level Ratio

5. Press the **Level Ratio** soft key to display the level ratio setup screen.
6. Use the left and right **arrow keys** to move between digits and the **knob** to set the level ratio.
   When setting the value directly using the numeric keypad, units are displayed on the soft key menu, so press the appropriate unit soft key. The setting is confirmed.
   The level ratio can be set up to 120%. However, values that would cause output level × level to exceed 125% of the current range are not allowed.

Setting the Phase

For a single-phase two-wire system (1P2W or 1P2W (HI Current)) only, set the voltage and current phases separately. For other wiring systems, set the phase of the phase current relative to the phase voltage.

7. Press the **Phase** soft key to display the phase setup screen.
8. Use the left and right **arrow keys** to move between digits and the **knob** to set the current phase relative to the reference signal.
   When setting the value directly using the numeric keypad, units are displayed on the soft key menu, so press the appropriate unit soft key. The setting is confirmed.

Setting the Power Factor (Shared with the voltage setting)

9. Press the **Power Factor** soft key to display the power factor setup screen.
10. Use the left and right **arrow keys** to move between digits and the **knob** to set the power factor.
    When setting the value directly using the numeric keypad, units are displayed on the soft key menu, so press the appropriate unit soft key. The setting is confirmed.
11. Press the **Power Factor** soft key again. A menu for setting the lead and lag of power factor appears.
12, To make the current waveform lead the voltage waveform, press the Lead soft key. Otherwise, press the Lag soft key.

Setting the Frequency (Shared with the voltage setting)

13. Press the **Frequency** soft key to display the frequency setup screen.
14. Use the left and right **arrow keys** to move between digits and the **knob** to set the frequency.
    When setting the value directly using the numeric keypad, units are displayed on the soft key menu, so press the appropriate unit soft key. The setting is confirmed.

Explanation

Current Range

The selectable current ranges are as follows:

Current Range		Output Range	Resolution
30 mA		0.000 to 37.500 mA	0.1 μA
100 mA		0.00 to 125.00 mA	1 μA
1 A		0.00000 to 1.25000 A	10 μA
10 A		0.0000 to 12.5000 A	100 μA
50 A		0.000 to 62.500 A	1 mA
Ext Sensor	500 mV	0.00 to 625.00 mV	10 μV
	5 V	0.0000 to 6.2500 V	100 μV

* You can select the 100 A and 150 A ranges by synchronizing the operation of several LS3300s. For details, see section 5.4.

Note

If current exceeding 1 kHz is output in the 50 A range, sound may be produced due to vibration of the front panel and the like, but this is not a malfunction.

Output Level

The output level can be set up to 120% of the current range. If output level × level ratio is set to a value exceeding 125% of the current range, the level ratio is changed automatically so that output level × level ratio is at 125% of the current range.

Level Ratio

Set the percentage of the output level to output. The range is 0 to 120%.
You can change the output value in steps by changing the level ratio.
For example, when the output level is 30 mA, current output of 0 mA, 7.5 mA, 15 mA, 22.5 mA, and 30 mA can be achieved by setting the level ratio to 0%, 25%, 50%, 75%, and 100%, respectively.
Values that would cause output level × level to exceed 125% of the current range are not allowed.

Current Output Level and Current Output

The current output level and current output that the LS3300 delivers are as follows:

Current output level = output level × level ratio

For current range

Current output = √2 × current output level × sin(2π × frequency × t + voltage phase)

For Ext Sensor

Current output = √2 × current output level × sin (2π × frequency × t + current phase)/sensor ratio

t: Time

Sensor ratio is the current ratio relative to the output voltage of the current sensor. For details on the setup procedure, see section 4.4.

Phase

When the wiring system is single-phase two-wire (1P2W or 1P2W (HI Current)), set the current phase relative to the reference signal. For other wiring systems, set the phase difference of the current relative to each phase voltage.

If you change the phase in the counterclockwise direction from 0°, the phase is expressed from 0 to 360°. If you change the phase in the clockwise direction from 0°, the phase is expressed from 0° to –179.999° and 180° to 0°. When –180° is reached, it switches to 180°.

When you change the current phase, the power factor also changes accordingly.

Power Factor

Set the power factor in the range of –1.0 to 0 to 1.0 along with lead or lag.

The power factor is calculated from the following equation.

Power factor = cos (current phase – voltage phase)

As such, because the power factor is the same when (current phase – voltage phase) is between 0° and 180° and between 0° and -180°, power factor by itself cannot be used to determine (current phase – voltage phase).

The LS3300 considers (current phase – voltage phase) in the range of 0° to 180° to be lead, and that in the range of 0° to -180° to be lag and uses the combination of the power factor and lead and lag to determine (current phase – voltage phase).

Setting the Lead and Lag

Set the lead direction and lag direction of the power factor.

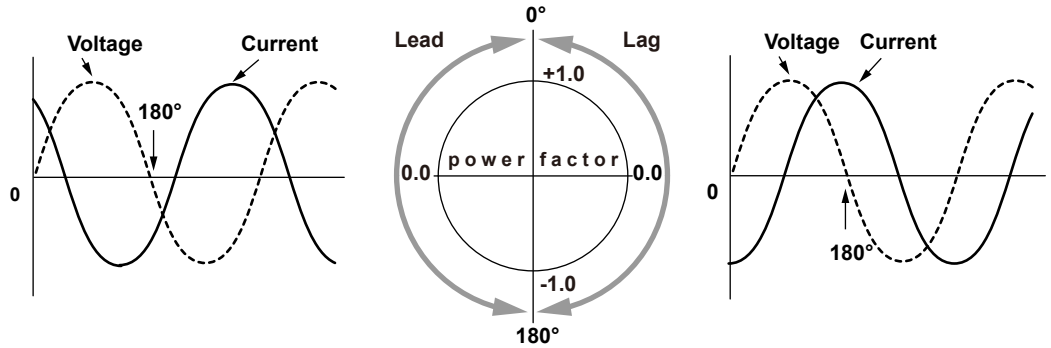

When you change the power factor, the current phase also changes accordingly.

Frequency

Set the output voltage/current frequency in the range of 40 Hz to 1200 Hz.

When operating in sync with another device, the signal is output at the frequency received from the reference device. For details, see chapter 5.

4.3 Setting the Sweep Function

Procedure

1. On the top menu, press the **CONFIG** soft key or the **CONFIG** key.
2. Press the **SWEEP** soft key. A setup menu for the sweep time and sweep range appears.

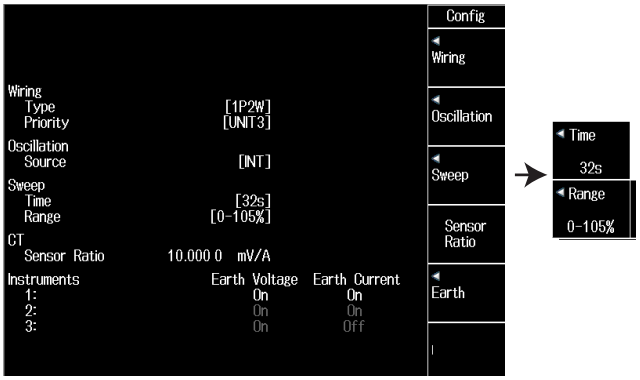

3. Press the **TIME** soft key. Available options for the sweep time are displayed. Press the soft key corresponding to the sweep time you want to select.
4. Press the **RANGE** soft key. Available options for the sweep range are displayed. Press the soft key corresponding to the sweep range you want to select.
5. To finish changing the settings, press **ESC**. The screen shown in step 1 appears.

Explanation

Sweep Time

You can set the sweep time for sweeping from the lower limit to the upper limit of the sweep range to 8 s, 16 s, 32 s, or 64 s.

Set the time for the output level to change from 0% to 100% (up) or from 100% to 0% (down).

Sweep Range

Set the sweep range to 0% to 100%, 0% to 105%, 0% to 110%, or 0% to 120% of the output level.

When sweeping starts, the level ratio changes within the specified range.

However, when output level × level ratio exceeds 125% of the output range, a linear value not exceeding 125% of the output range is maintained.

Executing the Sweep Operation

When voltage or current is output from the LS3300, you can sweep either the voltage or current. For details, see section 4.7.

4.4 Setting the Conversion Ratio of the Current Sensor

Procedure

1. On the top menu, press the **CONFIG** soft key or the **CONFIG** key.
2. Press the **Sensor Ratio** soft key to display the current sensor conversion ratio setup screen.

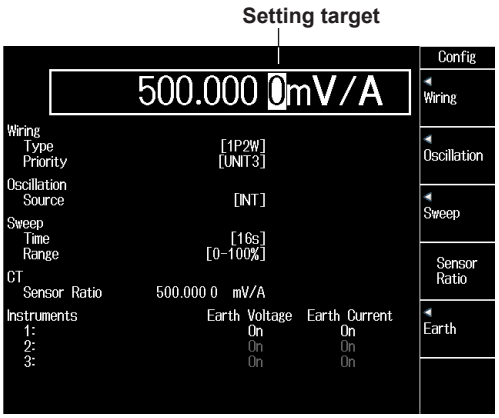

3. Use the left and right **arrow keys** to move between digits and the **knob** to set the output level. When setting the value directly using the numeric keypad, units are displayed on the soft key menu, so press the appropriate unit soft key. The setting is confirmed.

Explanation

Conversion Ratio

Set the voltage-to-current conversion ratio for when the output range is set to EXT SENSOR during current output.

4.5 Selecting Whether to Ground the LO Terminal (COMMON Terminal)

Procedure

CAUTION

If you select “no ground” (OFF), do not apply a voltage exceeding the withstand voltage to ground (12 Vpk). Doing so can damage the LS3300.

French

ATTENTION

Si vous sélectionnez “sans masse” (OFF), n’appliquez pas une tension dépassant la tension de résistance à la masse (12 Vpk). Cela pourrait endommager le LS3300.

1. On the top menu, press the **CONFIG** soft key or the **CONFIG** key.
2. Press the **EARTH** soft key. A setup menu for Lo terminal grounding of voltage and current appears.

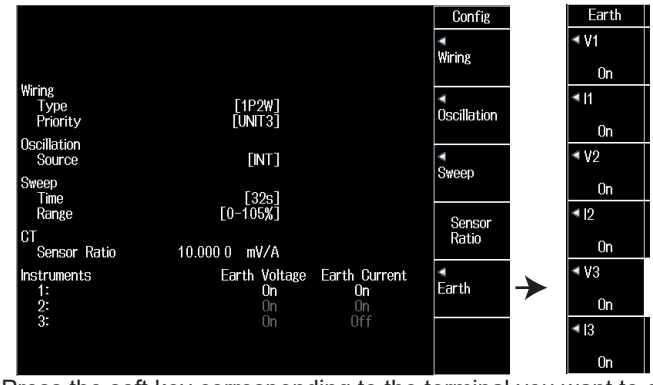

3. Press the soft key corresponding to the terminal you want to ground. A ON/OFF setup menu appears. Press the ON or OFF soft key.

Explanation

Set whether to ground the LO terminal of the voltage and current output.
ON: The LO terminal is grounded.
OFF: The LO terminal is not grounded.

If one of the terminals on the output target is grounded to avoid errors caused by a ground loop, connect the LO terminal of the LS3300 to the terminal that is grounded, and set the LO terminal to “no ground” (OFF). If the target device is not grounded, ground the LO terminal (ON). If the LO terminals of multiple LS3300s are connected in parallel, ground the LO terminal of a single LS3300 (set to ON) and leave the others ungrounded (set to OFF).

4.6 Turning the Output On and Off

WARNING

Never touch the terminals or cables when the LS3300 output is on. Doing so may cause electric shock.

French

AVERTISSEMENT

Ne touchez jamais les bornes ou les câbles lorsque la sortie du dispositif LS3300 est sous tension. Ceci risquerait d'entraîner un choc électrique.

Procedure

1. Press **V1** or **I1**. You can also press both. The key you press illuminates to indicate that the LS3300 is in the standby state.
2. Press **OUTPUT** to output the signal corresponding to the illuminated key.
   The output is turned on, and the OUTPUT key illuminates. If you press OUTPUT when the output is on, the output is turned off, and the OUTPUT key also turns off. When the output is on, the voltage or current output value is displayed.
   If you press V1 or I1 when the output is on, the output is turned off, and the OUTPUT key also turns off. If you press it again, the output turns back on.

Note

When outputting current from the current terminals, do not open the current terminals.
When outputting voltage from the voltage terminals, do not short the voltage terminals.
In either case, the overload protection function will be activated, an error code will be displayed, and the output will be turned off.

When Outputting from a Slave Device in Sync with a Master Device (synchronous operation, see chapter 5)

If the LS3300s are connected so that the slave devices can be controlled from the master device through USB, the output of the slave devices can be turned on and off from the master device.
You can control the unit whose Master unit-in-operation indicator is lit in green. The unit-in-operation indicators on the slave devices controllable from the master device light in blue.

1. Press the voltage (V1/V2/V3) or current (I1/I2/I3) key on the unit whose Master unit-in-operation indicator is lit. You can also press both keys. The key illuminates to indicate that the LS3300 is in the standby state.
2. Press **OUTPUT** to output the signal corresponding to the illuminated key.
   Likewise, you can also turn on or off the voltage or current during output.

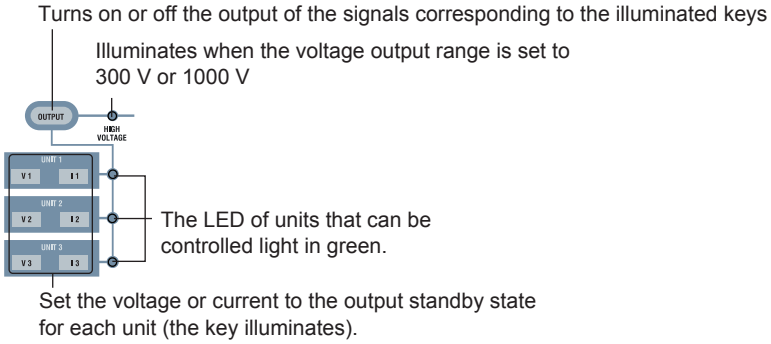

Note

If the unit-in-operation indicators of the master device are blinking in red, the corresponding units are not connected properly. Check the sync signal connections and USB connections.

Explanation

Turning the Output On and Off

If the master device's UNIT2 and UNIT3 terminals are connected to the USB ports of the slave devices, the output of slave devices can be turned on and off from the master device. You cannot turn the output on and off from the slave devices.
If the units are connected correctly, the corresponding unit-in-operation indicators of the master device light in green. The unit-in-operation indicators on the slave devices light in blue.
If the unit-in-operation indicators of the master device are blinking in red, the connections are not correct. Check the sync signal connections and USB connections.
For details on wiring systems, connection method of priority units, and configuration procedure, see chapter 5.

Output Value Display

If an asterisk is displayed next to the output value on the voltage/current setup screen, the corresponding signal is not being output.
If slave devices are being controlled from the master device using synchronous communication, an asterisk will be displayed in the output value display of the master device if any of the related signals including those of slave devices is not being output.

4.7 Turning the Sweep Function On and Off

Procedure

1. With the output turned on, on the top menu, press the **V** or **I** soft key or the **V** or **I** key.
2. Press the Level Ratio soft key twice to display a sweep direction setup menu.
3. Press the Sweep Up or Sweep Down soft key. Sweeping starts, and the level ratio value is varied.

   The Sweep Up, Sweep Down, and Hold soft keys appear on the screen.

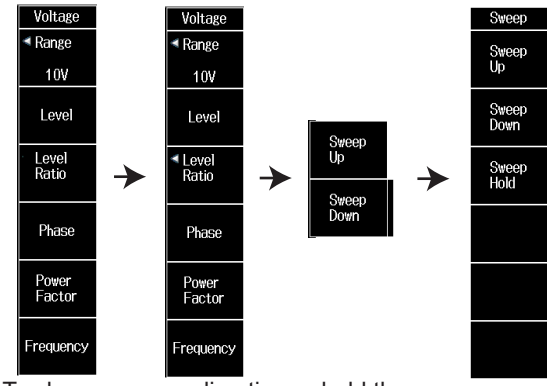

4. To change sweep direction or hold the sweep, press the corresponding soft key.

   When the level ratio reaches the lower or upper limit of the sweep range, the level ratio is retained, and the menu returns to that of before step 2.

Explanation

Sweep Output Range and Output Time

Set the sweep output range and sweep time in the following ranges.

Output range: 0 to 100%, 0 to 105%, 0 to 110%, 0 to 120% of the output range

Sweep time: Use Level Ratio to set 8 s, 16 s, 32 s, or 64 s.

For details on the setup procedure, see section 4.3.

Sweep Operation

When sweeping starts, the LS3300 operates differently depending on the output value and upper output limit at the start of sweeping.

For details, see section 2.3.

5.1 Configuring Synchronous Operation

Procedure

Wiring Procedure

Operating Three LS3300s in Sync

1. Connect the master LS3300's OSC OUTPUT signal I to Slave1 LS3300's EXT OSC INPUT I.

   Likewise, connect the Master LS3300's OSC OUTPUT signal Q to the Slave1 LS3300's EXT OSC INPUT Q.

2. Connect the Slave1 LS3300's OSC OUTPUT signal I to the Slave2 LS3300's EXT OSC INPUT I.

   Likewise, connect the Slave1 LS3300's OSC OUTPUT signal Q to the Slave2 LS3300's EXT OSC INPUT Q.

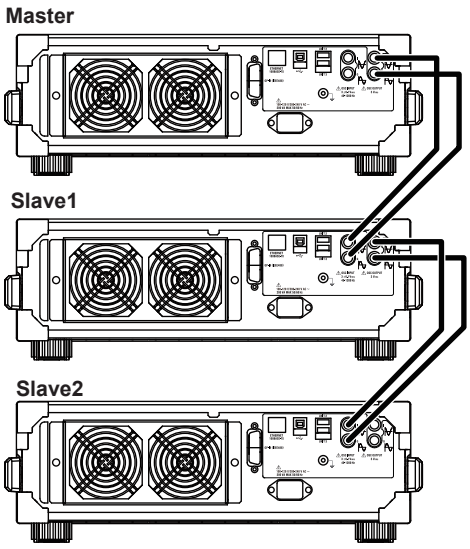

Operating a 2558A and LS3300 in Sync

1. Connect the 2558A's OSC OUTPUT signal I to the LS3300's EXT OSC INPUT I.

   Likewise, connect the 2558A's OSC OUTPUT Q to the LS3300's EXT OSC INPUT Q.

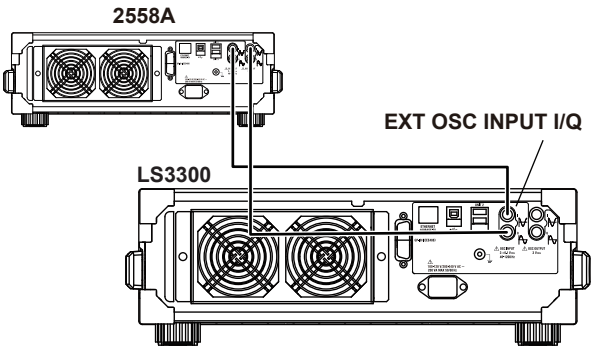

Setup

1. On the top menu, press the **CONFIG** soft key or the **CONFIG** key.
2. Press the **Oscillation** soft key to display a reference signal setup menu.

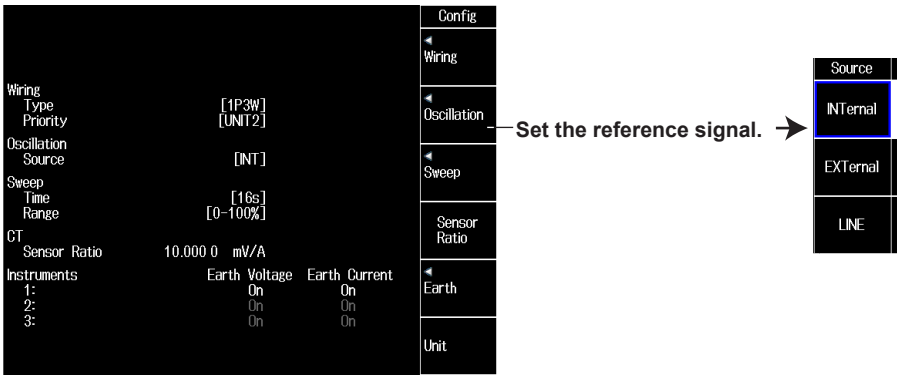

3. Press the **Internal** (master or not using synchronous operation), **External** (slave), or **LINE** (operate in sync with the power supply LINE signal) soft key.

   The signal set on the LS3300 to be used as the master device is the reference signal.

   Set the LS3300s to be used as slave devices to EXTernal.

Explanation

Synchronous operation is possible with up to three LS3300s or with YOKOGAWA's 2558A or other similar devices.
Synchronous operation is also possible with the power supply line signal supplied to the LS3300.
When synchronous operation is performed with a 2558A, the frequency is synchronized but not the phase. Adjust the phase manually.
The signal set here becomes the reference signal of the phase.

I/O Circuit Diagram

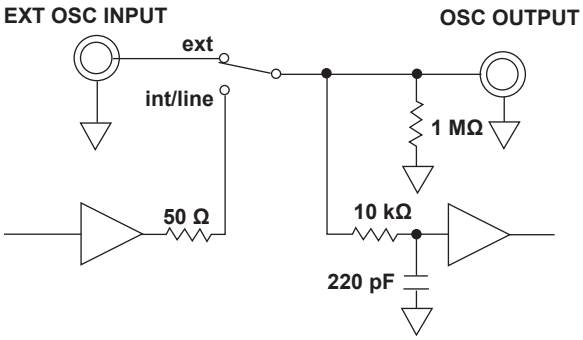

External Signal Input

CAUTION

The input voltage is 3 Vrms, and the input resistance is approximately 1 MΩ. Do not apply excessive voltage.

French

ATTENTION

La tension d'entrée est de 3 Vrms et la résistance d'entrée est d'environ 1 MΩ. Ne pas appliquer de tension excessive.

Use an orthogonal two-phase generator for the external oscillator, and connect to both the I and Q terminals of OSC INPUT. Operation will fail if you only connect to only one of the terminals.

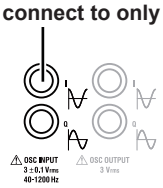

Input Section (EXT OSC INPUT)

Input voltage:	3 ± 0.1 Vrms, sine wave
Frequency range:	40 Hz to 1200 Hz
Input resistance:	Approx. 1 MΩ
I/Q phase difference:	Within 90 ± 0.1°

Internal Signal Output

CAUTION

Do not short or apply external voltage to the output terminal.

French

ATTENTION

Ne pas court-circuiter ou appliquez une tension externe à la sortie.

Connect to the corresponding external input terminals on the other LS3300.

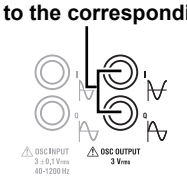

Output Section (OSC OUTPUT)

Output voltage: 3 ± 0.1 Vrms, sine wave
Frequency range: 40 Hz to 1200 Hz
Output resistance: Approx. 50 Ω
However, if the oscillation is set to External or LINE, the signal connected to EXT OSC INPUT or the LINE signal is output.

Sync Signal

Internal: An AC signal is output at the specified frequency. Use this setting when the LS3300 is used individually or on the master device when performing synchronous operation with several LS3300s.

External: An AC signal with the same frequency as the signal applied to the external signal input terminal (OSC INPUT) is output. Use this setting when synchronizing with a 2558A or on a slave device when performing synchronous operation with several LS3300s.

LINE: An AC signal with the same frequency as the power supply is output.
You can set this on the master device and make several LS3300s output signals synchronized with the master device's line signal.

Wiring System

To perform synchronous operation according to a wiring system, configure the LS3300 according to section 5.2, "Setting the Wiring System."

5.2 Setting the Wiring System

Procedure

1. On the top menu, press the **CONFIG** soft key or the **CONFIG** key.
2. Press the **Wiring** soft key. A menu for setting the wiring system and priority unit appears.

Set the wiring system.

3. Press the Type soft key to display a wiring system setup menu.

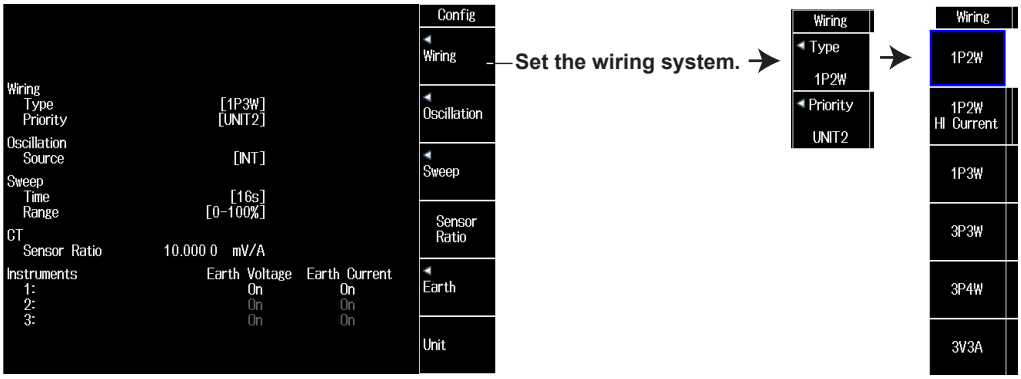

4. Press the soft key corresponding to the wiring system you want to select. The wiring system setup menu closes, and the specified wiring system LED illuminates.

Setting the Priority Unit

5. Press the **Priority** soft key to display the priority unit setup menu.

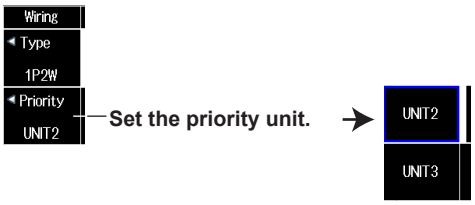

6. Press the **Unit2** or **Unit3** soft key. The priority unit setup menu closes.
7. Press **ESC**.

Explanation

Wiring System

The LS3300 supports the following wiring systems.

- Single-phase two-wire (1P2W)
- Single-phase two-wire (1P2W HI Current)
- Single-phase three-wire (1P3W)
- Three-phase three-wire (3P3W)
- Three-phase four-wire (3P4W)
- Three-voltage three-current method (3P3W (3V3A))

If the master device's wiring system is set to single-phase two-wire (1P2W HI Current), single-phase three-wire (1P3W), three-phase three-wire (3P3W), three-phase four-wire (3P4W), three-voltage three-current method (3P3W(3V3A)), several LS3300s must be operated in sync.
Set slave devices to single-phase two-wire.
For details on each wiring system, see section 5.3, "Wiring System and Wiring."

Priority Unit

When operating several LS3300s in sync using the single-phase two-wire (high current), single-phase three-wire, three-phase three-wire, or three-voltage three-current method system, select the unit to prioritize.
Unit2: To source voltage and current with T phase reference
Unit3: To source voltage and current with S phase reference

Note

If you want to change the wiring system to single-phase three-wire (S phase reference), three-phase three-wire (S phase reference), or single-phase two-wire (high current 100 A range) while keeping the wiring of the actual wiring system (see page 2-9) at three-phase three-wire (three-voltage three-current method), three-phase four-wire, or single-phase two-wire (high current 150 A range) and the priority unit set to UNIT3 (S phase reference), check that the reference signal of UNIT2 (slave device) is set to external signal (EXTernal). If the reference signal of UNIT2 (slave device) is set to internal signal (INTernal), UNIT3 (slave device) will not be able to synchronize with UNIT1 (master device).
If you use the adapter 366923 (BNC T) to connect the units, UNIT3 (slave) can be synchronized to UNIT1 (master), regardless of the UNIT2 (slave) settings (see page 2-11).

Procedure to Output Signals (Balanced Signals) According to a Wiring System

To output signals according to a wiring system, follow the procedure below.

1. Connect the devices that are to operate in sync (see section 5.3).
   (Connect the sync signal, and connect the master device's UNIT2 and UNIT3 to the slave devices' USB ports.)
2. Set the wiring system of the Slave1, and Slave2 to single-phase two-wire system.
3. Set the wiring system of the Master to the wiring system of the signal you want to source.
4. Set the priority unit.
5. If you set the wiring system to single-phase two-wire (1P2W HI Current), set the current range to 100 A or 150 A.

Setting the Slave Devices

Connecting the master device's UNIT2 and UNIT3 to the slave devices' USB ports and setting the wiring system and priority unit forces the slave devices' settings to synchronize to the master device's. You cannot change the settings on the slave devices themselves.

5.3 Wiring System and Wiring

Single-Phase Two-Wire

Wiring

Single LS3300

When synchronizing to an external signal from the 2558A or the like

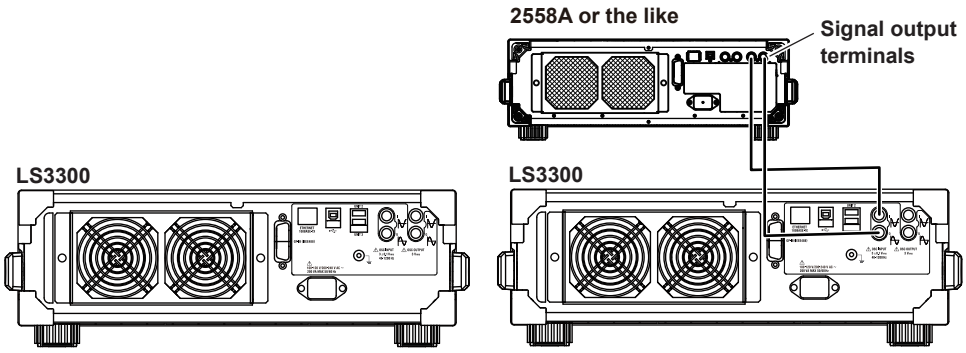

Oscillation: Internal

Oscillation: External

Wiring Diagram

Wiring when measuring power

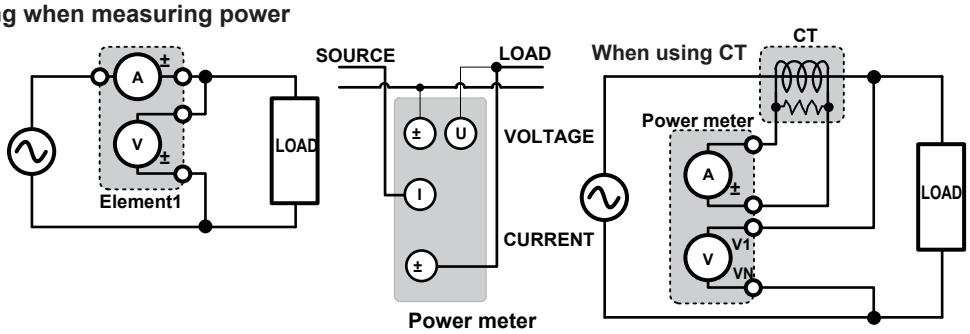

Wiring when calibrating power

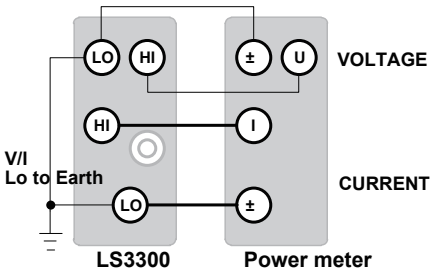

Single-Phase Two-Wire (Hi Current)

Wiring

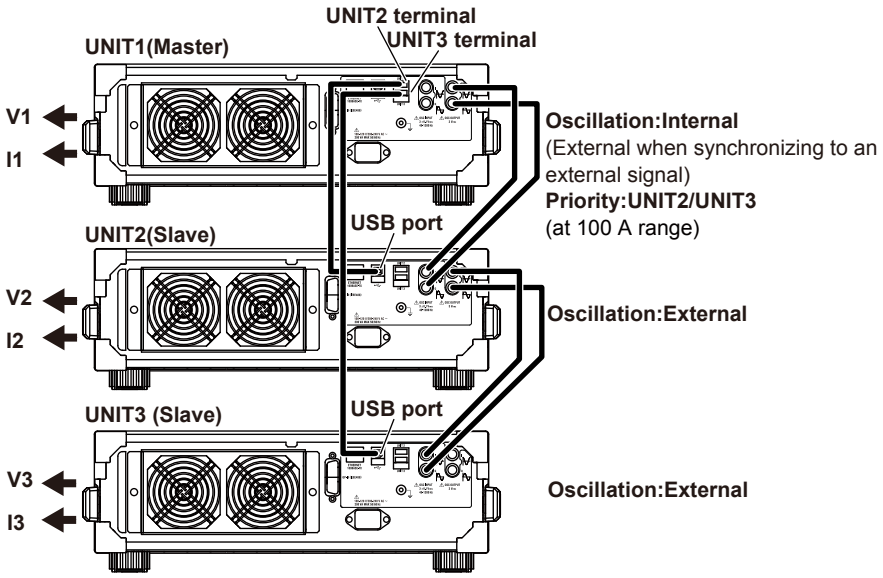

If you are using the 100 A range, you can connect only one of the units, UNIT2 or UN

Wiring Diagram

Wiring when measuring power

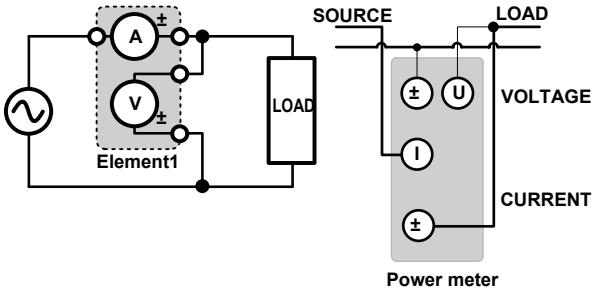

Wiring when calibrating power(100 A range)

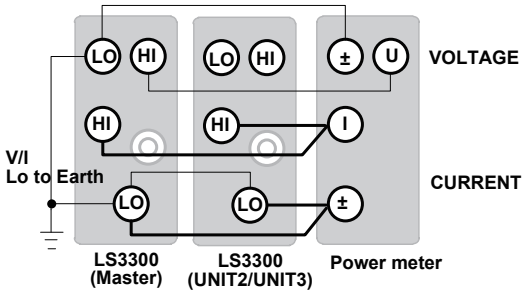

Wiring when calibrating power(100 A range)

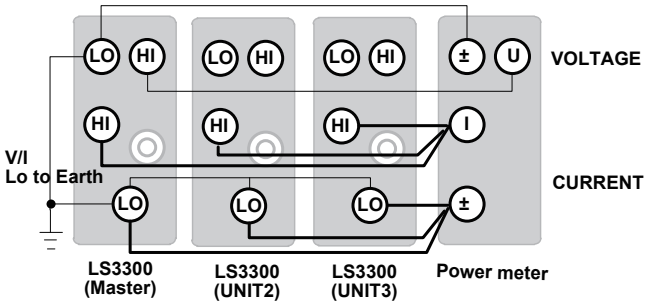

Single-Phase Three-Wire (T phase reference)

Wiring

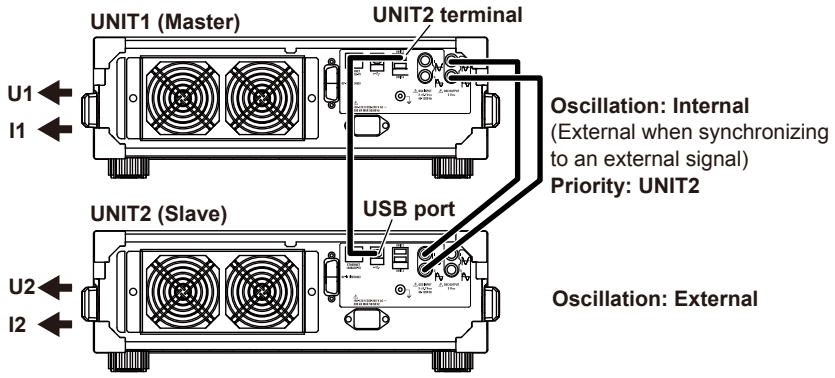

When outputting unbalanced phase signals, UNIT2 terminal and USB port connections are not necessary.

Wiring Diagram

Wiring when measuring power

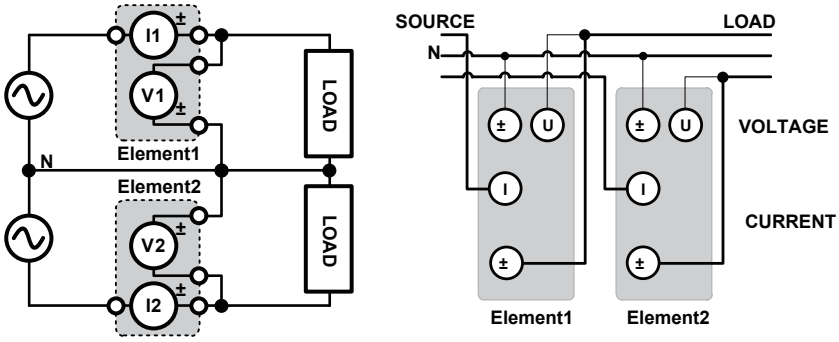

Wiring when calibrating power

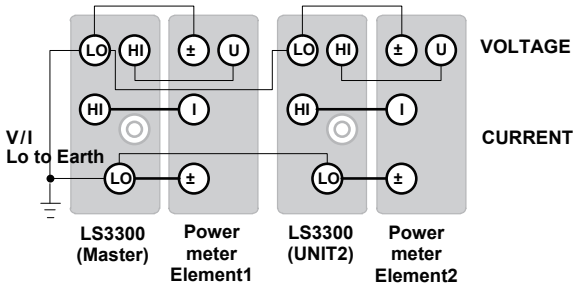

Single-Phase Three-Wire (S phase reference)

Wiring

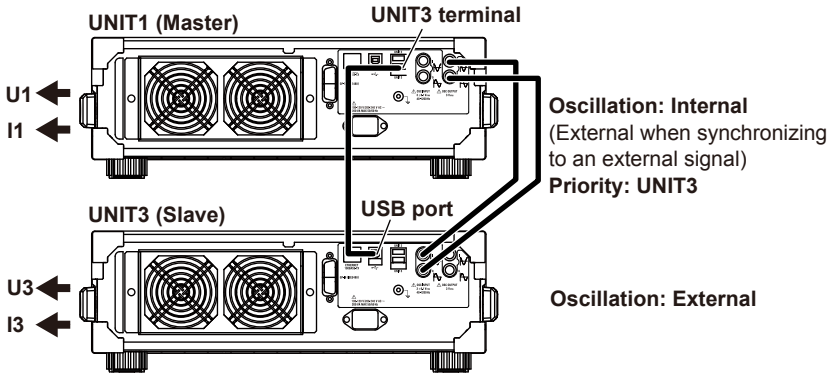

When outputting unbalanced phase signals, UNIT3 terminal and USB port connections are not necessary.

Wiring Diagram

Wiring when measuring power

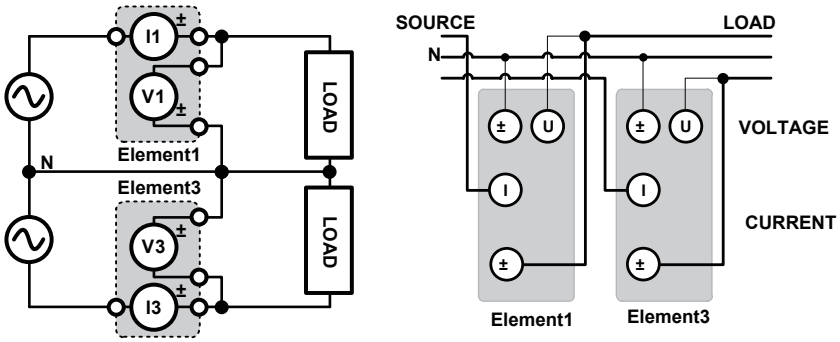

Wiring when calibrating power

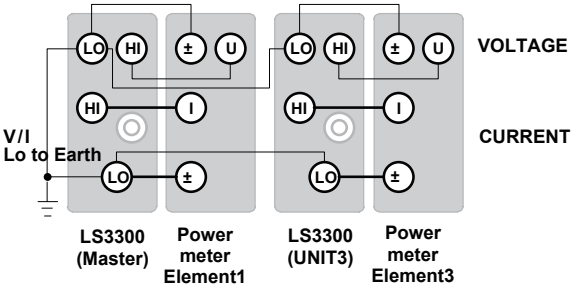

Three-Phase Three-Wire (T phase reference)

Wiring

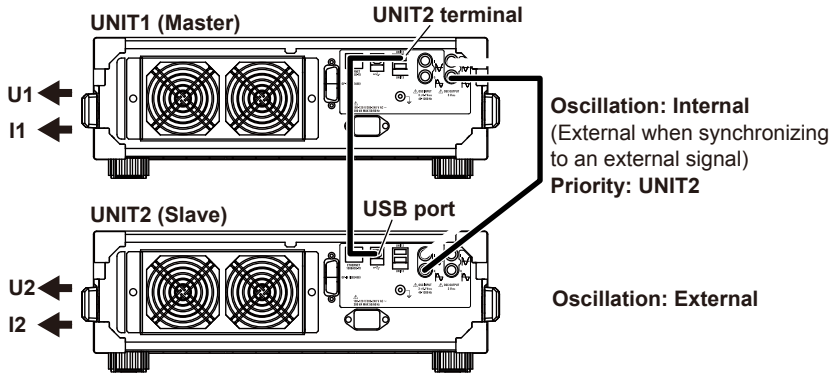

When outputting unbalanced phase signals, UNIT2 terminal and USB port connections are not necessary.

Wiring Diagram

Wiring when measuring power

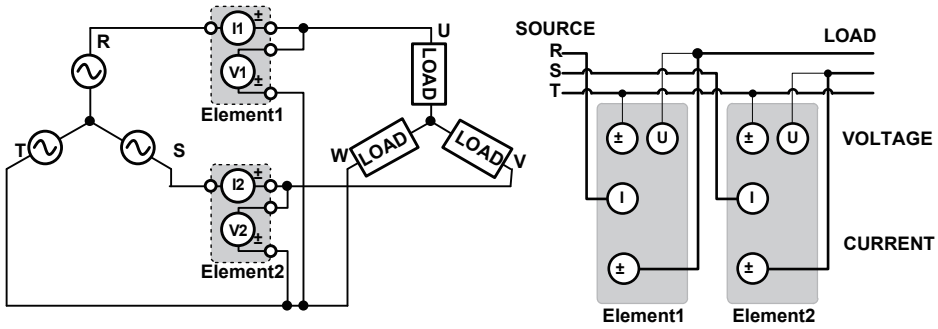

Wiring when calibrating power

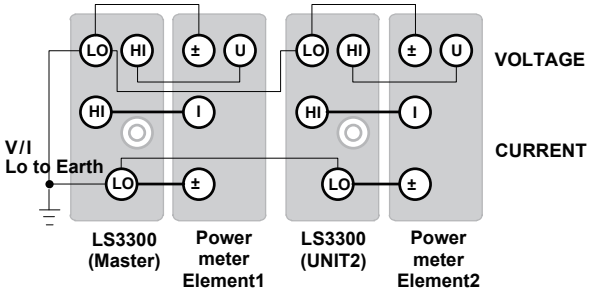

Three-Phase Three-Wire (S phase reference)

Wiring

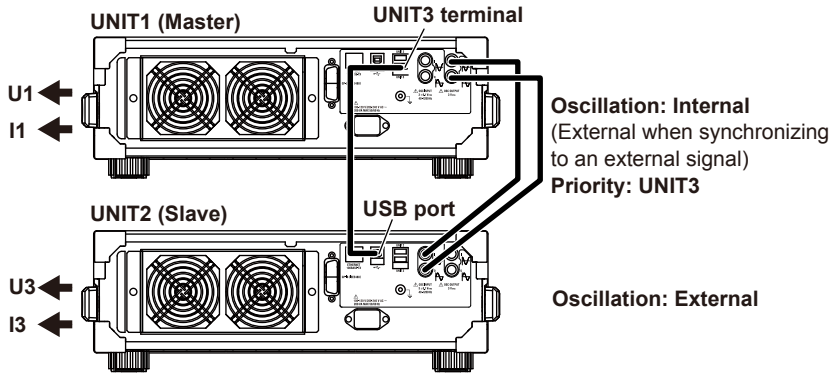

When outputting unbalanced phase signals, UNIT3 terminal and USB port connections are not necessary.

Wiring Diagram

Wiring when measuring power

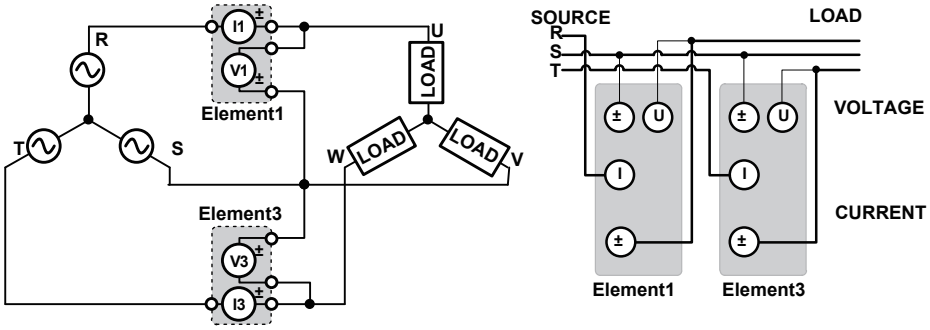

Wiring when calibrating power

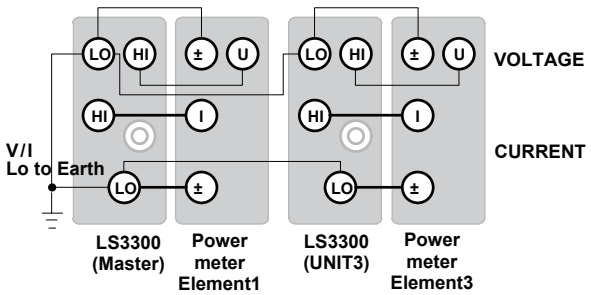

Three-Phase Three-Wire (Three-voltage three-current method, T phase reference)

Wiring

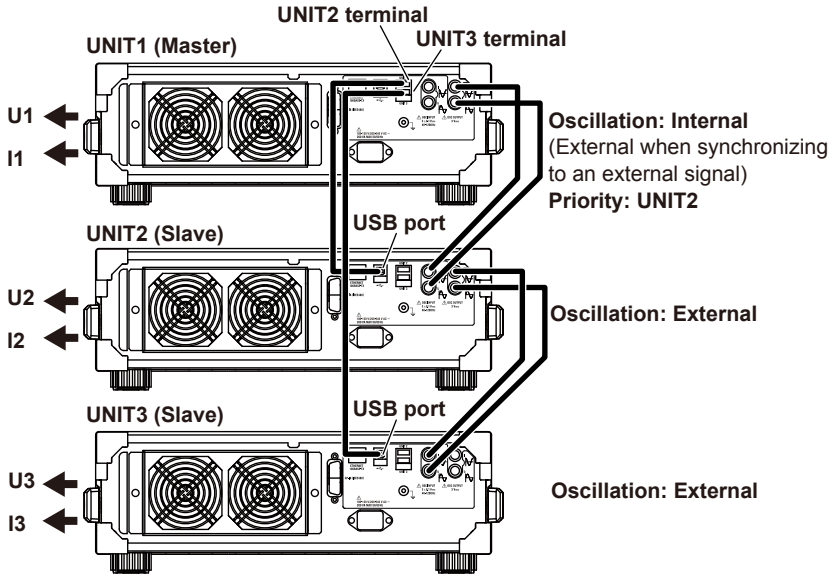

When outputting unbalanced phase signals, UNIT2 terminal, UNIT3 terminal, and USB port connections are not necessary.

Wiring Diagram

Wiring when measuring power

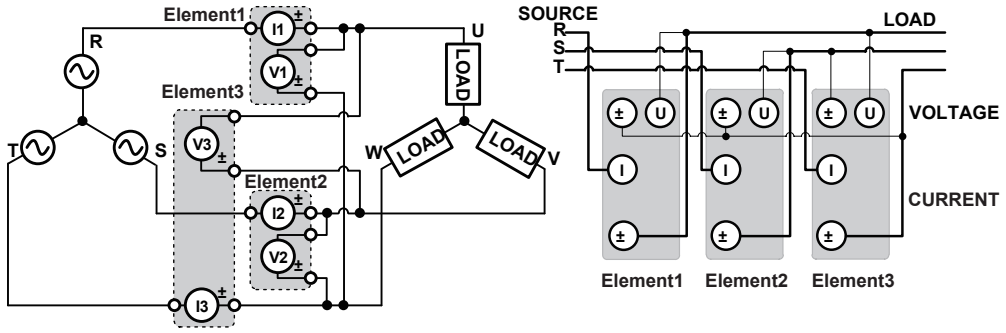

Wiring when calibrating power

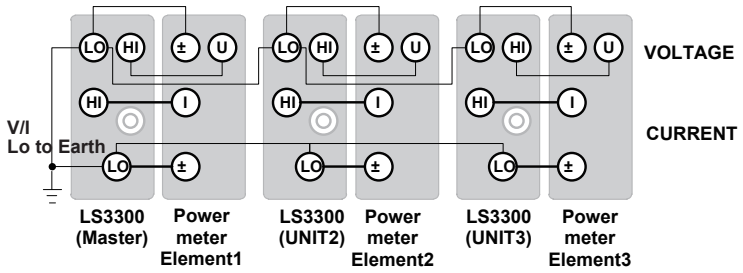

Three-Phase Three-Wire (Three-voltage three-current method, S phase reference)

Wiring

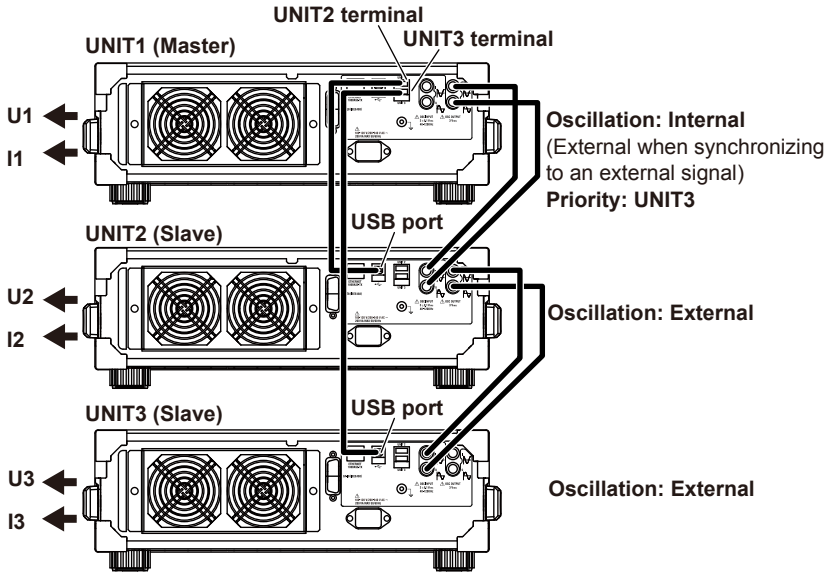

When outputting unbalanced phase signals, UNIT2 terminal, UNIT3 terminal, and USB port connections are not necessary.

Wiring Diagram

Wiring when measuring power

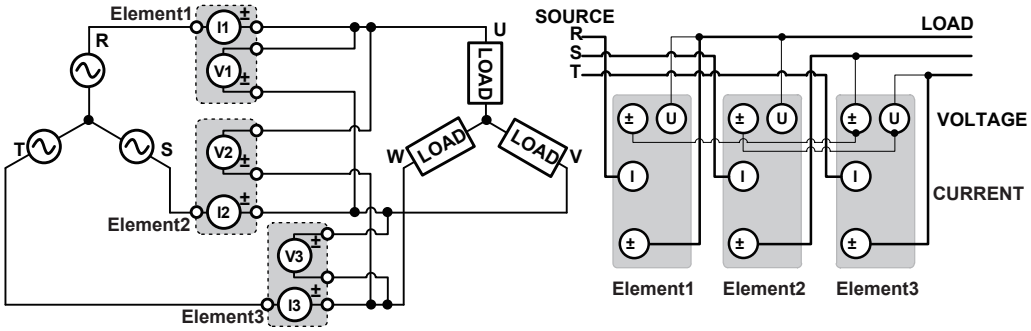

Wiring when calibrating power

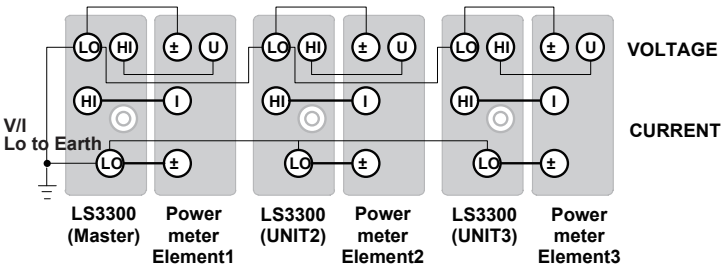

Three-Phase Four-Wire (T phase reference, S phase reference)

Wiring

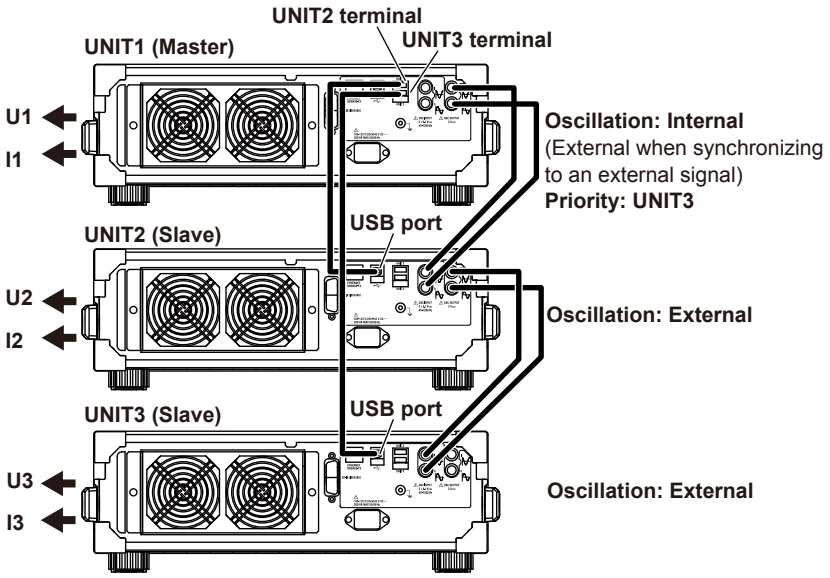

When outputting unbalanced phase signals, UNIT2 terminal, UNIT3 terminal, and USB port connections are not necessary.

Wiring Diagram

Wiring when measuring power

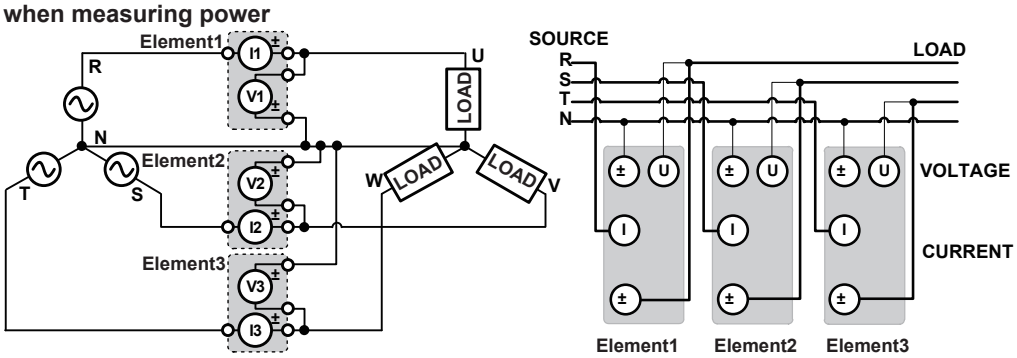

Wiring when calibrating power

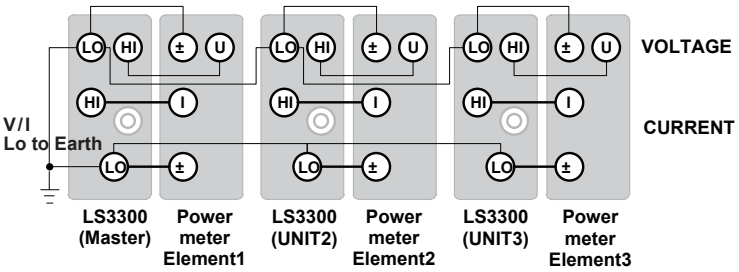

Note

If a high current and small voltage are output simultaneously, the voltage output may fluctuate due to the effects of interference. If this happens, twist the voltage output cables.

5.4 Outputting High Current

CAUTION

Changing the current range from a high current range (100 A or 150 A) to 50 A or lower range enables operation of individual slave devices, but do not operate the slave devices individually using the wiring for high current generation. When the output is shorted, turning on the output of an LS3300 using different settings from those of the master device can damage the LS3300.

French

ATTENTION

La modification de plage de courant d'une plage de courant élevé (100 A ou 150 A) à 50 A ou une plage inférieure permet le fonctionnement de certains peripohériques esclaves individuels. N'exploitez pas de périphériques esclaves individuellement à l'aide du câblage de la génération de courant élevé. Lorsque la sortie est court-circuitée, l'activation de la sortie d'un LS3300 à l'aide de paramètres différents de ceux du périphérique maître peut endommager le LS3300.

Procedure

Connect the LS3300s according to "Single-Phase Two-Wire (High Current)" in section 5.3, "Wiring System and Wiring."
Set the wiring system to 1P2W (HI Current) according to section 5.3, "Wiring System and Wiring."

1. On the top menu of the master device, press the I soft key or the I key.

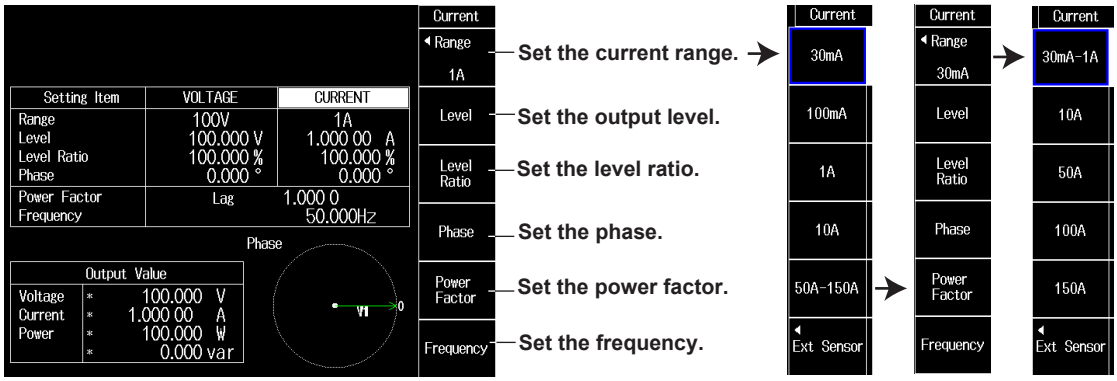

Setting the Current Range

2. Press the Range soft key. Available options are displayed.

   If 100A or 150A is not displayed, press the 50A-150A soft key and then the Range soft key once again.

3. Or, press the 100A or 150A soft key.

4. Set the output level, level ratio, phase, power factor, and frequency.

   The procedure is the same as in section 4.2, "Setting the Output Current."

Explanation

Current synchronized to the current output from the master device is output from each slave device.
The slave devices output current according to the master device's settings.
You can output 100 A by synchronizing two LS3300s and 150 A by synchronizing three LS3300s.
If you connect three LS3300 and set the current to the 100 A range, current is output from the master device and the slave device set as the priority unit.

Note

If the LS3300 is used in the 50 A or lower range with connections for high current output, errors may occur depending on the load conditions. We recommend that you remove the connections from the slave devices when using the 50 A or lower range.

5.5 Checking the Master Device and Slave Devices

By connecting the master device's UNIT2 and UNIT3 terminals to the USB ports of the slave devices (to perform synchronous communication), you can view the settings of the slave devices from the master device.

Procedure

Specifying the Unit You Want to Check

1. On the master devices' top menu, press the CONFIG soft key or the CONFIG key.
2. Press the UNIT soft key. A menu for specifying the unit to control appears.

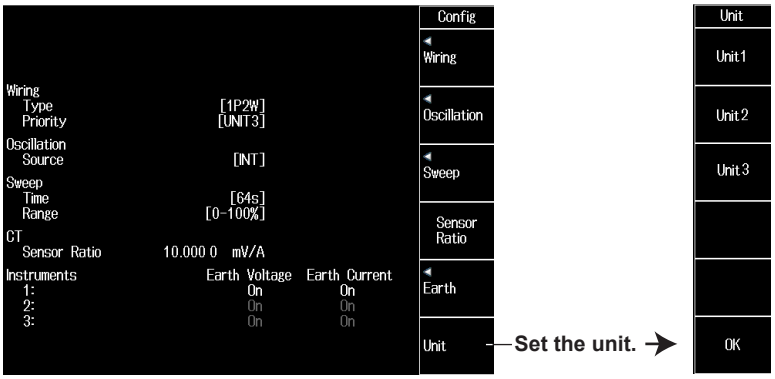

3. Press the soft key corresponding to the unit you want to check.

   The setup screen of the specified unit appears on the master device's screen.

   Press the OK soft key or ESC to return to the CONFIG screen.

6.1 Turning the Beep Sound On and Off

Procedure

1. On the top menu, press the **UTILITY** soft key or the **UTILITY** key.
2. Press the **Preference** soft key.

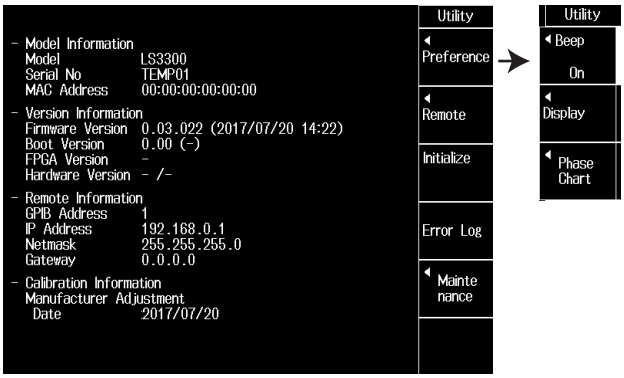

3. Press the **Beep** soft key.
4. Press the **On** or **Off** soft key.

Explanation

Set whether to turn the beep sound on or off.

On: The beep sound is on.

Off: The beep sound is off.

You can turn the beep sound on or off for the following notifications. You cannot change the volume.

- When an error is detected during a self-test executed at power-on or executed manually (error codes: E.911 to E950)
- When the voltage output is set to 150 V or higher
- When 150 V or a higher voltage is being output
- When a sweep operation is held

6.2 Turning the Display On and Off and Setting the Brightness

Procedure

1. On the top menu, press the **UTILITY** soft key or the **UTILITY** key.
2. Press the **Preference** soft key.

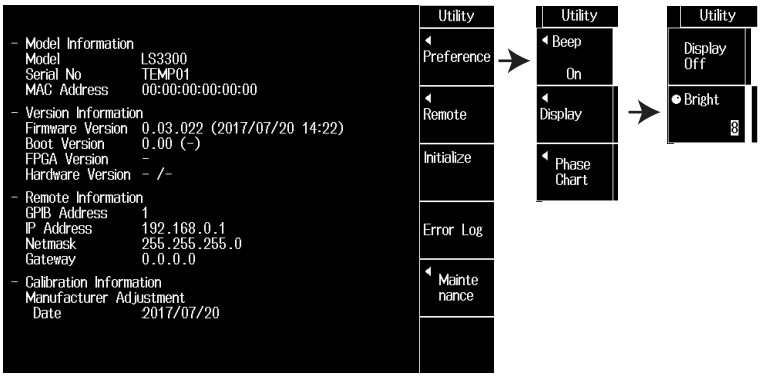

3. Press the **Display** soft key.

Turning the Display On and Off

4. Press the **Display Off** soft key to turn off the display.

   To turn on the display, operate a panel key or knob.

Setting the Brightness

4. Press the **Bright** soft key.
5. Turn the **knob** to set the brightness.

Explanation

Turning the Display Off

You can turn the display off.

All displays on the LCD are turned off.

The original screen reappears when you operate a panel key or knob.

Setting the Brightness

Set the LCD brightness.

The range is 0 to 10.

The larger the value, the brighter the screen.

6.3 Setting the Phase Display Type

Procedure

1. On the top menu, press the **UTILITY** soft key or the **UTILITY** key.
2. Press the **Preference** soft key.

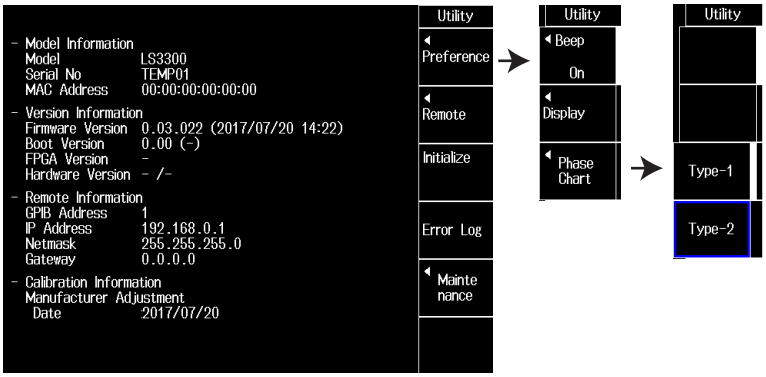

3. Press the **Phase Chart** soft key.
4. Press the **Type1** or **Type2** soft key.

Explanation

The phase display shows the phase relationship of signals. Amplitudes are not displayed.
There are two types of phase displays: Type1 and Type2.

Type1: Phase 0° (reference signal phase) points to the right.
Normally, the reference is V1 pointing to the right.
Arrows are displayed from the initial point.

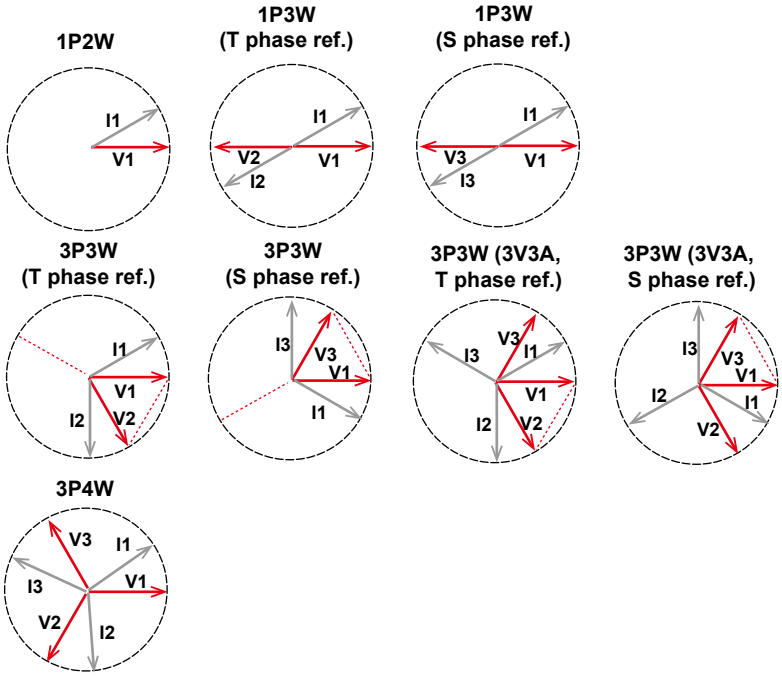

Example of 30° lead

Example of in-phase (0°)

Example of 30° lead

Type2: Phase 0° (reference signal phase) points up.
Normally, the reference is V1 pointing up.
For three-phase three-wire, the initial point of voltage is shifted.

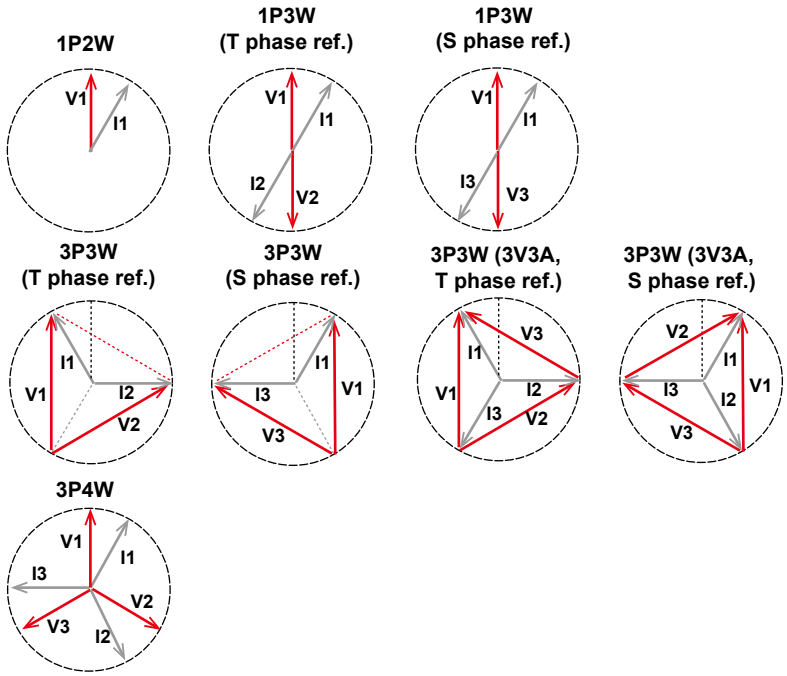

Example of 30° lag

Example of in-phase (0°)

Example of 30° lag

6.4 Error Log Display

Procedure

1. On the top menu, press the **UTILITY** soft key or the **UTILITY** key.
2. Press the **Error Log** soft key to display the error log.

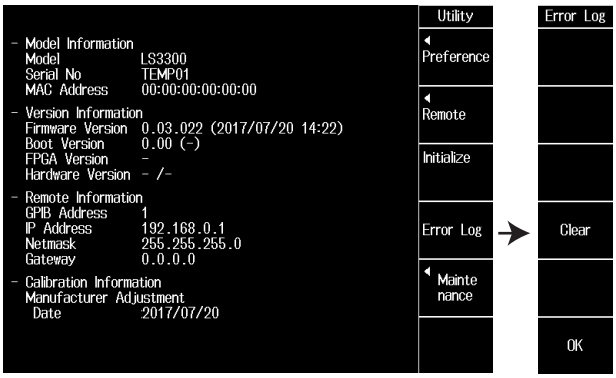

3. Press the **Clear** soft key to delete all errors.
4. Press the **OK** soft key or **ESC** to return to the UTILITY screen.

Explanation

Displaying the Error Log

Errors that occurred in the past are listed.

For details on error codes, see section 13.3.

6.5 Initializing the Settings

Procedure

1. On the top menu, press the **UTILITY** soft key or the **UTILITY** key.
2. Press the **Initialize** soft key.

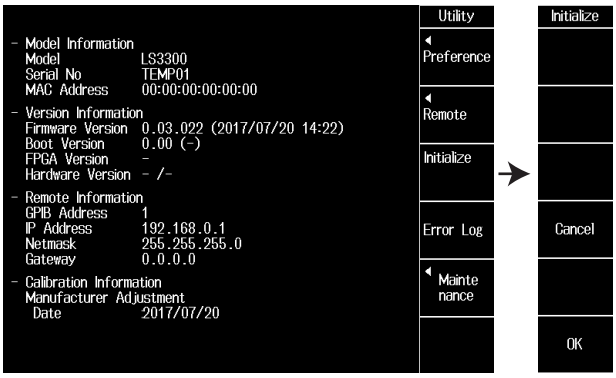

3. Pressing the **OK** soft key initializes the settings.

   Press the **Cancel** soft key or **ESC** to not perform initialization and return to the UTILITY screen.

Explanation

You can initialize the LS3300 to its factory default settings.
If you initialize the master device's settings when several LS3300s are operating in sync, the slave devices are also initialized.
You cannot perform initialization on the slave LS3300s. Perform initialization from the master device.
GP-IB and Ethernet settings are not initialized.
For details on the items that are initialized, see appendix 2.

6.6 Displaying the Product Information

Procedure

1. On the top menu, press the **UTILITY** soft key or the **UTILITY** key.

   The product information is displayed.

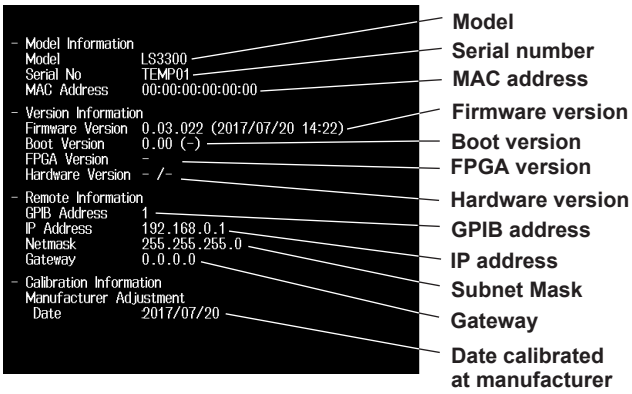

7.1 USB Interface Features and Specifications

USB Interface Features

Reception Feature

- With the exception of turning the power switch on and off, you can use the reception feature to specify the same settings that you specify by using the front panel keys.
- The LS3300 can receive output requests for output values, output frequencies, panel setup parameters, and error codes.

Transmission Feature

- The LS3300 can transmit output values and output frequencies.
- The LS3300 can transmit panel setup parameters and the status byte.
- The LS3300 can transmit error codes when errors occur.

USB Interface Specifications

Item	Specifications
Number of ports	1
Connector	Type B connector (receptacle)
Electrical and mechanical	Complies with USB Rev.2.0
Supported transfer modes	HS (High Speed; 480 Mbps) and FS (Full Speed; 12 Mbps)
Supported protocols	USBTMC-USB488(USB Test and Measurement Class Ver.1.0)
PC system requirements	A PC with a USB port, running the English or Japanese version of Windows 7(32bit/64bit)/Windows 8(32bit/64bit)/Windows 10(32bit/64bit)

Switching between Remote and Local Modes

When Switching from Local to Remote Mode

The LS3300 switches to remote mode when it is in local mode and receives a remote transition request from the PC.

- The REMOTE indicator illuminates.
- All operations using the knob and panel keys are disabled except for switching to local mode using the **UTILITY** key.
- Settings entered in local mode are retained even when the LS3300 switches to remote mode.

When Switching from Remote to Local Mode

When the LS3300 is in remote mode and you press UTILITY or when the LS3300 receives a local transition request from a PC, the LS3300 switches to local mode. However, this is not possible when local lockout has been activated by the controller.

- The REMOTE indicator turns off.
- Operations using the knob and panel keys are enabled.
- Settings entered in remote mode are retained even when the LS3300 switches to local mode.

Note

You cannot use the USB interface simultaneously with other interfaces (GP-IB or Ethernet).

7.2 Connecting through the USB Interface

Connection Procedure

Connect the cable as shown below.

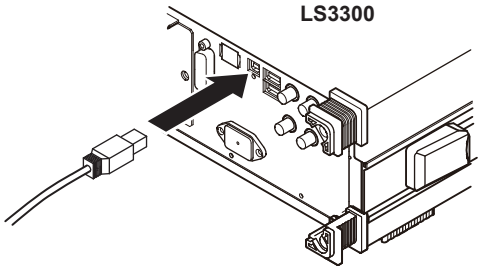

Notes on Connection

- Be sure to insert the USB cable connector firmly into the USB port.
- If you are connecting multiple devices by using a USB hub, connect the LS3300 to the USB hub port that is closest to the port that the controller is connected to.
- Do not connect or remove the USB cable from the time when the LS3300 is turned on until operation becomes available (approximately 20 to 30 seconds). Doing so may damage the LS3300.

Connection When Performing Synchronous Operation

When several LS3300s are operating in sync, connect the cables as follows:

- To output balanced signals (connect the master device's UNIT2 and UNIT3 terminals to the USB ports of the slave devices)
  Connect the PC to the master device's USB port.
- To output unbalanced signals (not connect the master device's UNIT2 and UNIT3 terminals to the USB ports of the slave devices)
  Connect the PC to the master device's USB port and to the USB port of each slave device.

Note

- Only use a single communication interface: USB, GP-IB, or Ethernet. If you send commands simultaneously from more than one communication interface, the LS3300 will not execute the commands properly.
- Install the YOKOGAWA USB TMC (Test and Measurement Class) driver on your PC. For information about how to obtain the YOKOGAWA USB TMC driver, contact your nearest YOKOGAWA dealer. You can also access the YOKOGAWA USB driver download web page and download the driver.
  http://www.yokogawa.com/jp-ymi/tm/F-SOFT/
- Do not use USB TMC drivers (or software) supplied by other companies.

8.1 Ethernet Interface Features and Specifications

Ethernet Interface Features

Reception Feature

- With the exception of turning the power switch on and off, you can use the reception feature to specify the same settings that you specify by using the front panel keys.
- The LS3300 can receive output requests for output values, output frequencies, panel setup parameters, and error codes.

Transmission Feature

- The LS3300 can transmit output values and output frequencies.
- The LS3300 can transmit panel setup parameters and the status byte.
- The LS3300 can transmit error codes when errors occur.

Ethernet Interface Specifications

Item	Specifications
Electrical and mechanical	Complies with IEEE802.3
Simultaneous connections	3
Communication protocol	TCP/IP(VXI-11)
Transmission system	ETHERNET(100BASE-TX/10BASE-T)
Supported services	DHCP, VXI-11
Connector type	RJ-45 connector

Switching between Remote and Local Modes

When Switching from Local to Remote Mode

The LS3300 switches to remote mode when it is in local mode and receives a remote transition request from the PC.

- The REMOTE indicator illuminates.
- All operations using the knob and panel keys are disabled except for switching to local mode using the UTILITY key.
- Settings entered in local mode are retained even when the LS3300 switches to remote mode.

When Switching from Remote to Local Mode

When the LS3300 is in remote mode and you press UTILITY or when the LS3300 receives a local transition request from a PC, the LS3300 switches to local mode.

- The REMOTE indicator turns off.
- Operations using the knob and panel keys are enabled.
- Settings entered in remote mode are retained even when the LS3300 switches to local mode.

Note

You cannot use the Ethernet interface simultaneously with other interfaces (GP-IB or USB).

8.2 Connecting to the Ethernet Interface

Connection Procedure

Connect a UTP (Unshielded Twisted-Pair) or STP (Shielded Twisted-Pair) cable that is connected to a hub or other network device to the Ethernet port on the LS3300 rear panel.

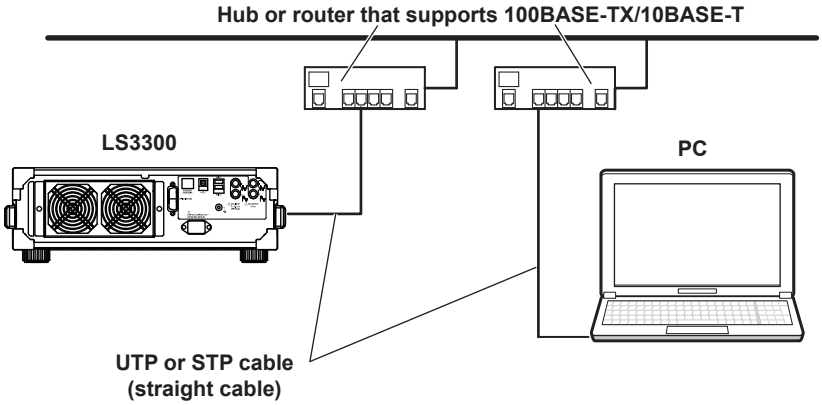

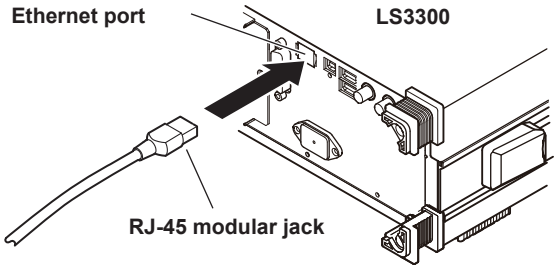

Notes on Connection

- To connect the LS3300 to a PC through a hub or router, use straight cables. To directly connect the LS3300 to a PC (one-to-one connection), use a crossover cable.
- Use a network cable that supports the data rate of your network.

Connection When Performing Synchronous Operation

When several LS3300s are operating in sync, connect the cables as follows:

- To output balanced signals (connect the master device's UNIT2 and UNIT3 terminals to the USB ports of the slave devices)
  Connect the PC to the master device's Ethernet port.
- To output unbalanced signals (not connect the master device's UNIT2 and UNIT3 terminals to the USB ports of the slave devices)
  Connect the PC to the master device's Ethernet port and to the Ethernet port of each slave device.

8.3 Configuring the LS3300 Ethernet Settings

This section explains the following setting for remotely controlling the LS3300 via the Ethernet interface:

Procedure

Turning DHCP On and Off

1. On the top menu, press the **CONFIG** soft key or the **CONFIG** key.
2. Press the **Remote** soft key.

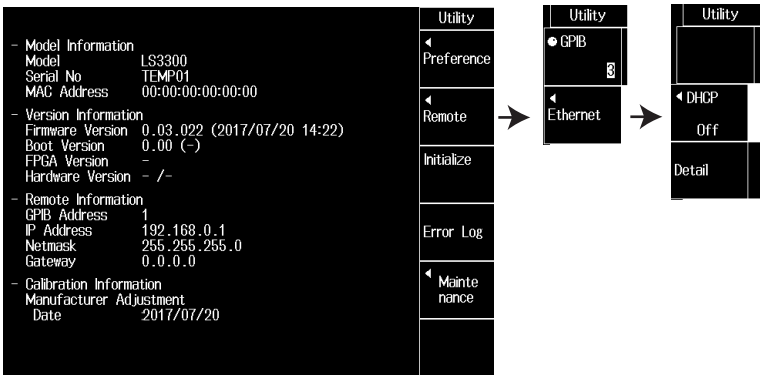

3. Press the **Ethernet** soft key.
4. Press the **DHCP** soft key.
5. Press the **On** or **Off** soft key. If you select Off, set the IP address, subnet mask, and default gateway.

Setting the IP Address, Subnet Mask, and Default Gateway

6. Press the **Detail** soft key to display the detailed setup screen for Ethernet.

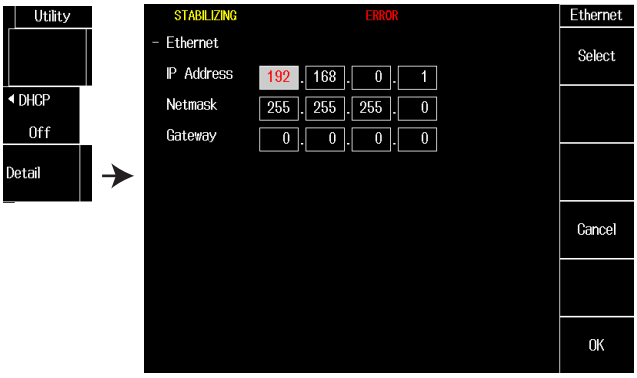

7. Select a setting box, and press the **Select** soft key. The selected setting box becomes editable.
8. Use the knob to change the value and arrow keys to change the selected digit. You can also enter the value directly from the numeric keypad.
9. Press the **Enter** soft key to confirm the value.
10. When you finish entering all the setting boxes, press the **OK** soft key. The settings will be confirmed.

    Press the **CANCEL** soft key to discard the settings and return to the UTILITY screen.

Explanation

To use the Ethernet interface, you must specify TCP/IP settings.

DHCP

DHCP is a protocol that temporarily allocates necessary information to a device so that it can connect to the Internet.

ON

If you are connecting the LS3300 to a network with a DHCP server, you can turn on the DHCP setting. If you do, the IP address will be automatically assigned to the LS3300 when it is connected to the network, so you do not have to set the address.

OFF

If you set DHCP to OFF, set the appropriate IP address, subnet mask, and default gateway for your network.

IP Address, Subnet Mask, and Default Gateway

Set the values according to the network you are connecting to. For details on the network, check with your network administrator.

9.1 GP-IB Interface Features and Specifications

GP-IB Interface Features

Reception Feature

- With the exception of turning the power switch on and off, you can use the reception feature to specify the same settings that you specify by using the front panel keys.
- The LS3300 can receive output requests for output values, output frequencies, panel setup parameters, and error codes.

Transmission Feature

- The LS3300 can transmit output values and output frequencies.
- The LS3300 can transmit panel setup parameters and the status byte.
- The LS3300 can transmit error codes when errors occur.

Note

Talk-only, listen-only, and controller capabilities are not available.

GP-IB Interface Specifications

Item	Specifications
Supported devices	National Instruments Corporation • PCI-GPIB and PCI-GPIB+ • PCIe-GPIB and PCIe-GPIB+ • PCMCIA-GPIB and PCMCIA-GPIB+ (not supported on Windows Vista or Windows 7.) • GPIB-USB-HS and GPIB-USB-HS+ Driver NI-488.2M Version 2.8.1 and later
Electrical and mechanical	Complies with IEEE St'd 488-1978
Functional specifications	See the table below.
Protocol	Complies with IEEE St'd 488.2-1992
Code	ISO (ASCII) codes
Mode	Addressable mode
Address	The address can be set in the range of 0 to 30.
Clear remote mode	Press UTILITY to clear remote mode. This is not possible when local lockout has been activated by the controller.

Functional Specifications

Function	Subset Name	Description
Source handshaking	SH1	Full source handshaking capability
Acceptor handshaking	AH1	Full acceptor handshaking capability
Talker	T6	Basic talker capability, serial polling, and untalk on MLA (My Listen Address). No talk-only capability.
Listener	L4	Basic listener capability and unlisten on MTA (My Talk Address). No listen-only capability
Service request	SR1	Full service request capability
Remote local	RL1	Full remote/local capability
Parallel polling	PP0	No parallel polling capability
Device clear	DC1	Full device clear capability
Device trigger	DT0	No device trigger capability
Controller	C0	No controller capability
Electric characteristics	E1	Open collector

Switching between Remote and Local Modes

When Switching from Local to Remote Mode

The LS3300 switches to remote mode when it is in local mode and receives a remote transition request from the PC.

- The REMOTE indicator illuminates.
- All operations using the knob and panel keys are disabled except for switching to local mode using the **UTILITY** key.
- Settings entered in local mode are retained even when the LS3300 switches to remote mode.

When Switching from Remote to Local Mode

When the LS3300 is in remote mode and you press UTILITY or when the LS3300 receives a local transition request from a PC, the LS3300 switches to local mode. However, this is not possible when local lockout has been activated by the controller.

- The REMOTE indicator turns off.
- Operations using the knob and panel keys are enabled.
- Settings entered in remote mode are retained even when the LS3300 switches to local mode.

Note

You cannot use the GP-IB interface simultaneously with other interfaces (USB or Ethernet).

9.2 Connecting through the GP-IB Interface

GP-IBCable

The LS3300 is equipped with an IEEE St'd 488-1978 24-pin GP-IB connector. Use a GP-IB cable that conforms to this standard.

Connection Procedure

Connect the cable as shown below.

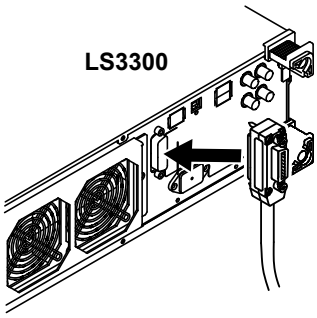

Notes on Connection

- Firmly tighten the screws on the GP-IB cable connector.
- On the PC end, use a GP-IB board (or card) made by National Instruments. For details, see section 9.1.
- The LS3300 may not operate properly if the LS3300 is connected to the PC through converters (such as a GP-IB to USB converter). For more details, contact your nearest YOKOGAWA dealer.
- Multiple cables can be used to connect multiple devices. However, no more than 15 devices, including the controller, can be connected on a single bus.
- When connecting multiple devices, you must assign a unique address to each device.
- Use cables that are no longer than 2 m in length to connect devices.
- Make sure the total length of all cables does not exceed 20 m.
- When devices are communicating, have at least two-thirds of the devices on the bus turned on.
- To connect multiple devices, use a daisy-chain or star configuration as shown below. You can also mix these configurations. Loop configuration is not allowed.

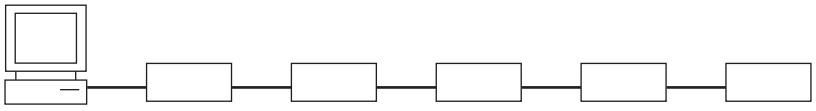

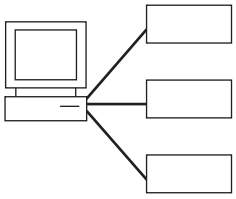

Connection When Performing Synchronous Operation

When several LS3300s are operating in sync, connect the cables as follows:

- To output balanced signals (connect the master device's UNIT2 and UNIT3 terminals to the USB ports of the slave devices)
  Connect the PC to the master device's GP-IB connector.
- To output unbalanced signals (not connect the master device's UNIT2 and UNIT3 terminals to the USB ports of the slave devices)
  Connect the PC to the master device's GP-IB port and to the GP-IB port of each slave device.

CAUTION

Be sure to turn off the PC and the LS3300 before you connect or remove communication cables. Otherwise, erroneous operation may result, or the internal circuitry may break.

French

ATTENTION

Toujours mettre le PC et le LS3300 hors tension avant de brancher ou de débrancher des câbles de communication, pour éviter tout dysfonctionnement ou panne du circuit interne.

9.3 Setting the GP-IB Address

Procedure

1. On the top menu, press the **CONFIG** soft key or the **CONFIG** key.
2. Press the **Remote** soft key.

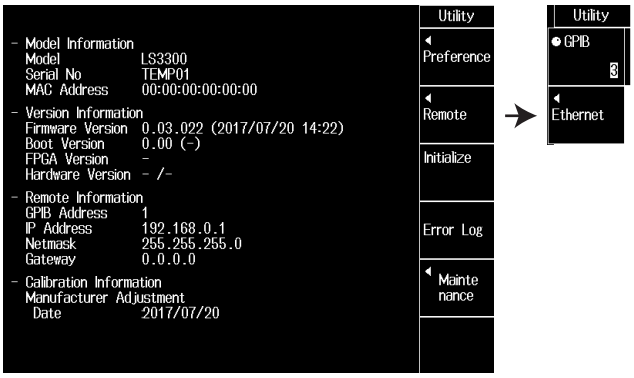

3. Press the **GP-IB** soft key.
4. Use the knob to set the GP-IB address.

Note

- Only use a single communication interface: USB, GP-IB, or Ethernet. If you send commands simultaneously from more than one communication interface, the LS3300 will not execute the commands properly.
- When the controller is communicating with the LS3300 or with other devices through GP-IB, do not change the address.
- Each device that is connected in a GP-IB system has its own unique address. This address is used to distinguish between different devices. Therefore, you must assign a unique address to the LS3300 when connecting it to a PC or other device.

9.4 Responses to Interface Messages

Responses to Interface Messages

Responses to Uni-Line Messages

- **IFC (Interface Clear)**
  Clears the talker and listener functions. Stops data transmission if it is in progress.

- **REN (Remote Enable)**
  Switches between the remote and local modes.

  IDY (Identify) is not supported.

Responses to Multi-Line Messages (Address commands)

- **GTL (Go To Local)**
  Switches the instrument to local mode.

- **SDC (Selected Device Clear)**
  - Clears the program message (command) being received and the output queue (see section 14.5).
  - Discards `*OPC` and `*OPC?` commands that are being executed.
  - Immediately aborts `*WAI` and `COMMunicate:WAIT` commands.

  PPC (Parallel Poll Configure) and TCT (Take Control), GET(Group Execute Trigger) are not supported.

Responses to Multi-Line Messages (Universal commands)

- **LLO (Local Lockout)**
  Prohibits switching to local mode through the use of the OUTPUT key on the front panel.

- **DCL (Device Clear)**
  The same operation as the SDC message.

- **SPE (Serial Poll Enable)**
  Sets the talker function on all devices on the bus to serial polling mode. The controller will poll each device one by one.

- **SPD (Serial Poll Disable)**
  Clears the serial polling mode of the talker function on all devices on the bus.

  PPU (Parallel Poll Unconfigure) is not supported.

What Are Interface Messages?

Interface messages are also referred to as interface commands or bus commands. They are commands that are issued by the controller. They are classified as follows:

Uni-line Messages

A single control line is used to transmit uni-line messages. The following three types are available.

- IFC (Interface Clear)
- REN (Remote Enable)
- IDY (Identify)

Multi-line Messages

Eight data lines are used to transmit multi-line messages. The messages are classified as follows:

- **Address Commands**

  Some address commands are valid when a device is designated as a listener, and some are valid when it is designated as a talker. The following five commands are available.

  Commands available to a device designated as a listener
  - GTL (Go To Local)
  - SDC (Selected Device Clear)
  - PPC (Parallel Poll Configure)
  - GET (Group Execute Trigger)

  Commands available to a device designated as a talker
  - TCT (Take Control)

- **Universal Commands**

  Universal commands are available to all devices regardless of their listener or talker designation. The following five commands are available.
  - LLO (Local Lockout)
  - DCL (Device Clear)
  - PPU (Parallel Poll Unconfigure)
  - SPE (Serial Poll Enable)
  - SPD (Serial Poll Disable)

There are other interface messages: listener-address, talk-address, and secondary commands.

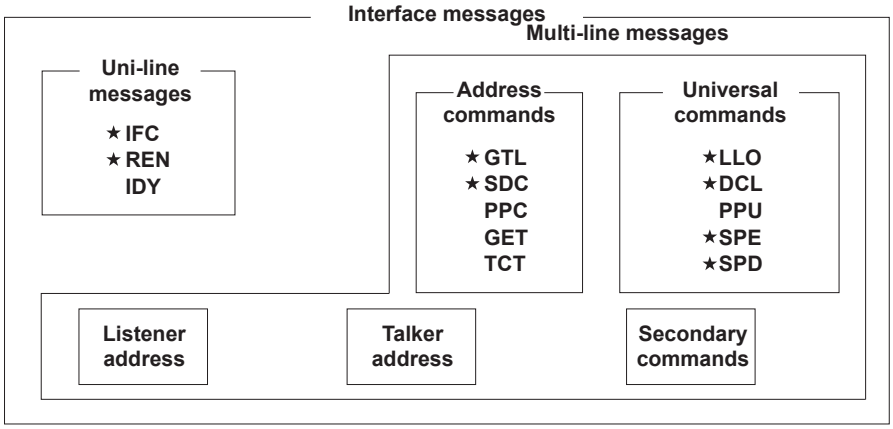

The LS3300 supports interface messages marked with a ★.

Note

Difference between SDC and DCL

In multi-line messages, SDC messages are those that require talker or listener designation and DCL messages are those that do not require a designation. Therefore, SDC messages are directed at a particular instrument while DCL messages are directed at all instruments on the bus.

10.1 Messages

Messages

Messages are used to exchange information between the controller and the LS3300. Messages that are sent from the controller to the LS3300 are called program messages, and messages that are sent from the LS3300 back to the controller are called response messages.

If a program message contains a command that requests a response (a query), the LS3300 returns a response message upon receiving the program message. The LS3300 returns a single response message in response to a single program message.

Program Messages

The program message syntax is shown below.

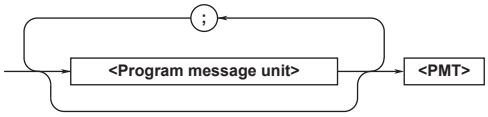

<Program message unit>

A program message consists of one or more program message units. Each unit corresponds to one command. The LS3300 executes the commands in the order that they are received.

Separate each program message unit with a semicolon.

For details on the program message syntax, see the next section.

Example

```
:SOURce:CURRent:RANGe 1A; LEVel 1A
```

Unit Unit

<PMT>

This is a program message terminator. The following three types are available.

NL (new line):	Same as LF (line feed). ASCII code “0AH.”
^END:	The END message as defined by IEEE 488.1 (The data byte that is sent with the END message is the last data byte of the program message.)
NL^END:	NL with an END message attached. (NL is not included in the program message.)

Program Message Unit Syntax

The program message unit syntax is shown below.

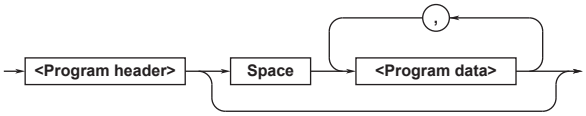

<Program Header>

The program header indicates the command type. For details, see section 10.2.

<Program Data>

Attach program data if there are conditions that are required to execute a command. Separate the program data from the header with a space (ASCII code 20H). If there are multiple sets of program data, separate each set with a comma.

For details, see section 10.4.

Example

```
:SOURce:CURRent:RANGe 1A<PMT>
```

Header Data

Response Messages

The response message syntax is shown below.

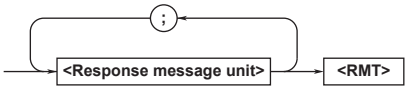

<Response Message Unit>

A response message consists of one or more response message units. Each unit corresponds to one response.

Separate each response message unit with a semicolon.

For details on the response message syntax, see the next page.

Example

Unit 1

```
:SOURCE:VOLTAGE:RANGE 1.0E+00;
LEVEL:VALUE 400.000E-03
```

Unit 2

<RMT>

RMT is a response message terminator. It is NL^END.

Response Message Unit Syntax

The response message unit syntax is shown below.

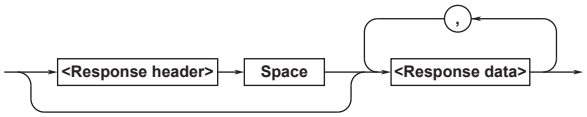

<Response header>

A response header sometimes precedes the response data. Separate the data from the header with a space. For details, see section 10.3.

<Response Data>

Response data contains the content of the response. If there are multiple sets of response data, separate each set with a comma. For details, see section 10.3.

Example

```
100.00E-03<RMT> :SOURCE:VOLTAGE:RANGE 1.0E+00<RMT>
```

Data Header Data

If there are multiple queries in a program message, responses are returned in the same order that the queries were received in. In most cases, a single query returns a single response message unit, but there are a few queries that return multiple units. The first response message unit always corresponds to the first query, but the nth response unit may not necessarily correspond to the nth query. Therefore, if you want to make sure that every response is retrieved, divide the program messages into individual messages.

Notes on Sending and Receiving Messages

- If the controller sends a program message that does not contain a query, the controller can send the next program message at any time.
- If the controller sends a program message that contains a query, the controller must finish receiving the response message before it can send the next program message. If the controller sends the next program message before receiving the response message in its entirety, an error will occur. A response message that is not received in its entirety will be discarded.
- If the controller tries to receive a response message when there is none, an error will occur. If the controller tries to receive a response message before the transmission of the program message is complete, an error will occur.
- If the controller sends a program message containing multiple message units, but the message contains incomplete units, the LS3300 will try to execute the ones that are believed to be complete. However, these attempts may not always be successful. In addition, if such a message contains queries, the LS3300 may not necessary return responses.

Deadlock

The LS3300 can store at least 1024 bytes of messages in its transmit and receive buffers (the number of available bytes varies depending on the operating conditions). If both the transmit and receive buffers become full at the same time, the LS3300 will no longer be able to operate. This condition is called a deadlock. If this happens, you can resume operation by discarding response messages.
Deadlock will not occur if the program message (including the <PMT>) is kept below 1024 bytes. Program messages that do not contain queries never cause deadlocks.

10.2 Commands

Commands

There are three types of commands (program headers) that a controller may send to the LS3300. The commands differ in their program header formats.

Common Command Header

Commands that are defined in IEEE 488.2-1992 are called common commands. The common command header syntax is shown below. Be sure to include an asterisk (`*`) at the beginning of a common command.

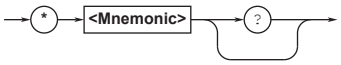

Common command example `*CLS`

Compound Header

Commands, other than common commands, that are specific to the LS3300 are classified and arranged in a hierarchy according to their functions. The compound header syntax is shown below. Be sure to use a colon to specify a lower hierarchical level.

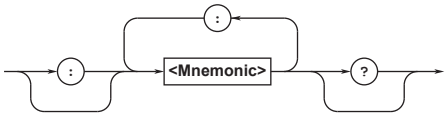

Simple Header

These commands are functionally independent and are not contained within a hierarchy. The format of a simple header is shown below.

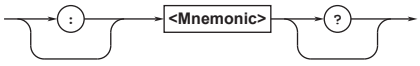

Note

A <mnemonic> is an alphanumeric character string.

When Concatenating Commands

- **Command Groups**

  A command group is a group of commands that have common compound headers arranged in a hierarchy. A command group may contain sub-groups.

  Example A portion of the commands from the voltage source command group

  ```
  :SOURce:VOLTage?
  :SOURce:VOLTage:RANGe
  :SOURce:VOLTage:LEVel[:VALue]
  :SOURce:VOLTage:LEVel:RATio
  :SOURce:VOLTage:PHASe[:VALue]
  :SOURce:VOLTage:OUTPut?
  ```

- **When Concatenating Commands of the Same Group**

  The LS3300 stores the hierarchical level of the command that is currently being executed and processes the next command on the assumption that it belongs to the same level. Therefore, the common header section can be omitted for commands that belong to the same group.

  Example
  ```
  :SOURce:CURRent:RANGe 1A;
  LEVel 0.3A<PMT>
  ```

- **When Concatenating Commands of Different Groups**

  If the subsequent command does not belong to the same group, place a colon in front of the header (this colon cannot be omitted).

  Example
  ```
  :SOURce:CURRent:LEVel 0.3A;
  :OSCillator:SOURce
  INTernal<PMT>
  ```

- **When Concatenating Simple Headers**

  If a simple header follows another command, place a colon in front of the simple header (this colon cannot be omitted).

- **When Concatenating Common Commands**

  Common commands that are defined in IEEE 488.2-1992 are independent of hierarchy. A colon is not needed before a common command.

  Example
  ```
  :SOURce:CURRent:RANGe 1A;*CLS;
  :SOURce:VOLTage:
  RANGe 300V<PMT>
  ```

- **When Separating Commands with <PMT>**

  If you separate two commands with a terminator, two program messages will be sent. Therefore, the common header must be specified for each command even when commands belonging to the same command group are being concatenated.

  Example
  ```
  :SOURce:CURRent:RANGe 1A<PMT>
  :SOURce:CURRent:LEVel 0.3A<PMT>
  ```

Upper-level Query

An upper-level query is a query that is made by appending a question mark to a command higher in the group. The controller can receive all of the settings in a group collectively by executing a highest-level query. Some upper-level queries of a group, which may be comprised of more than three hierarchical levels, can cause the LS3300 to transmit all the lower level settings.

Example
```
:SOURce:VOLTage?<PMT> →
:SOURCE:VOLTAGE:RANGE 300.0E+00;
LEVEL:VALUE 0.00000E+00;
RATIO 100.000;:SOURCE:VOLTAGE:
PHASE:VALUE 0.000<RMT>
```

The response to an upper-level query can be sent back to the LS3300 as a program message. This enables the settings that were present when the upper-level query was made to be reproduced later on. However, some upper-level queries do not return setup parameters that are not currently in use. Exercise caution because not all of a group's information is necessarily returned in a response.

Header Interpretation Rules

The LS3300 interprets the header that it receives according to the rules below.

- Mnemonics are not case sensitive.
  Example "`SOURce`" can also be written as "`source`" or "`SOURCE`."
- The lower-case characters can be omitted.
  Example "`SOURce`" can also be written as "`SOURc`" or "`SOUR`."
- The question mark at the end of a header indicates that it is a query. You cannot omit the question mark.
  Example The shortest abbreviation for "`SYSTem?`" is "`SYST?`."
- Parts of commands and parameters enclosed in square brackets ([ ]) can be omitted.
  Example `:OUTPut[:STATe] ON` can also be written as "`OUTP ON`."
  However, the last section enclosed in square brackets cannot be omitted in an upper-level query.
  Example "`SYSTem?`" and "`SYSTem:COMMunicate?`" are different queries.

10.3 Responses

Responses

When the controller sends a query with a question mark, the instrument returns a response in the following format.

- **Response with a Header and Data**
  Responses that can be used as program messages without any changes are returned with command headers attached.
  Example `:SOURce:VOLTage:RANGe?<PMT>` →
  `:SOURCE:VOLTAGE:`
  `RANGE 300.0E+00<RMT>`
- **Response with Only Data**
  Responses that cannot be used as program messages unless changes are made (query-only commands) are returned without headers. However, there are query-only commands that return responses with headers.
  Example `:OSCillator:READ?<PMT> ->`
  `50.000<RMT>`

If You Want the LS3300 to Return Responses without Headers

You can configure the LS3300 so that even responses that have both headers and data are returned without headers. Use the `COMMunicate:HEADer` command for this purpose.

Abbreviated Form

The LS3300 normally returns response headers with the lower-case section removed. You can configure the LS3300 so that full headers are returned. Use the `COMMunicate:VERBose` command for this purpose. The sections enclosed in square brackets ([ ]) are also omitted in the abbreviated form.

10.4 Data

Data

Data contains conditions and values that are written after the header. A space separates the data from the header. Data is classified as follows:

Data	Meaning
<Decimal>	A value expressed in decimal notation (Example: The denominator of the output divider `->:DIVider:DENominator 4`
<Voltage><Current> <Time><Frequency> <Phase><Percentage>	A physical value (Example: Voltage range setting `->:SOURce:RANGe 300V`
<Register>	A register value expressed as binary, octal, decimal, or hexadecimal (Example: Extended event register value `-> STATUS:EESE #HFE`)
<Character Data>	Predefined character string (mnemonic). Select from the available strings in braces. (Example: Select the source function `->:SOURce:FUNCtion {VOLTage|CURRent}`
<Boolean>	Indicates on and off. Specify ON, OFF, or a value. (Example: Turn the output on. `->:OUTPut:STATe ON`)
<String Data>	User-defined string (Example: Ethernet IP address setting `->:SYSTem:COMMunicate:ETHernet:IP "192.168.0.1"`
<Block Data>	Data that contains 8-bit values

<Decimal>

<Decimal> indicates a value expressed as a decimal number, as shown in the table below. Decimal values are written in the NR form as specified in ANSI X3.42-1975.

Symbol	Meaning	Example		
<NR1>	Integer	`125`	`-1`	`+1000`
<NR2>	Fixed-point number	`125.0`	`-.90`	`+001.`
<NR3>	Floating-point number	`125.0E+0`	`-9E-1`	`+.1E4`
<NRf>	Any of the forms <NR1> to <NR3>			

- The LS3300 can receive decimal values that are sent from the controller in any of the forms <NR1> to <NR3>. This is expressed as <NRf>.
- The LS3300 returns a response to the controller in one of the forms from <NR1> to <NR3> depending on the query. The same form is used regardless of the size of the value.
- For the <NR3> form, the plus sign after the "E" can be omitted. You cannot omit the minus sign.
- If a value outside the setting range is specified, an error (error number: 222 Data out of range.) occurs.
- If a value has more significant digits than are available, the value will be rounded.

<Voltage>, <Current>, <Time>, <Frequency>, <Phase>, <Percentage>

<Voltage>, <Current>, <Time>, <Frequency>, <Phase>, and <Percentage> indicate decimal values that have physical significance. A <Multiplier> or <Unit> can be attached to the form that was described earlier. Use one of the following syntaxes.

Syntax	Example
<NRf><Multiplier><Unit>	`5MV`
<NRf><Unit>	`5E-3V`
<NRf><Multiplier>	`5M`
<NRf>	`5E-3`

<Multiplier>

Multipliers that you can use are indicated in the following table.

Symbol	Word	Multiplier
EX	Exa	10^{18}
PE	Peta	10^{15}
T	Tera	10^{12}
G	Giga	10^{9}
MA	Mega	10^{6}
K	Kilo	10^{3}
M	Milli	10^{-3}
U	Micro	10^{-6}
N	Nano	10^{-9}
P	Pico	10^{-12}
F	Femto	10^{-15}

<Unit>

Units that you can use are indicated in the following table.

Symbol	Word	Meaning
V	Volt	Voltage
A	Ampere	Current
S	Second	Time
HZ	Hertz	Frequency
PCT	Percent	Percent
DEG	Degree	Angle

- <Multiplier> and <Unit> are not case sensitive.
- "U" is used to indicate micro (μ).
- "MA" is used for Mega to distinguish it from Milli. However, "MA" is interpreted as milliampere for current.
- If both <Multiplier> and <Unit> are omitted, the basic unit (V, A, or S) is used.

<Register>

<Register> indicates an integer, and can be expressed in hexadecimal, octal, or binary as well as a decimal number. This is used when each bit of the value has a particular meaning. Use one of the following syntaxes.

Syntax	Example
<NRf>	1
#H<Hexadecimal value made up of the digits 0 to 9 and A to F>	#H0F
#Q<Octal value made up of the digits 0 to 7>	#Q777
#B<Binary value made up of the digits 0 and 1>	#B001100

- <Register> is not case sensitive.
- Response messages are always expressed in the <NR1> form.

<Character Data>

<Character Data> is a specified string of character data (a mnemonic). It is mainly used to indicate options and is chosen from the character strings given in { }. The data interpretation rules are the same as those described in “Header Interpretation Rules” in section 10.2.

Syntax	Example
{VOLTage|CURRent}	VOLTage

- As with the header, the COMMunicate:VERBose command can be used to select whether to return the response in the full form or in the abbreviated form.
- The COMMunicate:HEADer setting does not affect <Character data>.

<Boolean>

<Boolean> is data that indicates ON or OFF. Use one of the following syntaxes.

Syntax	Example
{ON|OFF|<NRf>}	ON OFF 1 0

- When <NRf> is expressed in the form, “OFF” is selected if the rounded integer value is 0, and “ON” is selected for all other cases.
- A response message is always returned with a 1 if the value is ON and with a 0 if the value is OFF.

<String Data>

<String data> is not a specified character string like <Character data>. It is an arbitrary character string. The character string must be enclosed in single quotation marks (') or double quotation marks (").

Syntax	Example
<String Data>	'ABC' "IEEE488.2-1992"

- If a character string contains a double quotation mark ("), the double quotation mark is expressed as two consecutive quotation marks (""). This rule also applies to single quotation marks.
- A response message is always enclosed in double quotation marks (").
- <String data> is any character string. Therefore, the instrument assumes that the remaining program message units are part of the character string if no closing single (') or double quotation mark (") is encountered. As a result, no error is detected if a quotation mark is omitted.

<Block Data>

<Block data> contains 8-bit values. It is only used in response messages on the LS3300. The syntax is as follows:

Syntax	Example
#N<N-digit decimal number> <Data byte sequence>	#800000010ABCDEFGHIJ

- #N
  Indicates that the data is <Block data>. N indicates the number of succeeding data bytes (digits) in ASCII code.
- <N-digit decimal number>
  Indicates the number of bytes of data (example: 00000010 = 10 bytes).
- <Data byte sequence>
  Expresses the actual data (example: ABCDEFGHIJ).
- Data is comprised of 8-bit values (0 to 255). This means that the ASCII code “0AH,” which stands for “NL,” can also be included in the data. Hence, care must be taken when programming the controller.

10.5 Synchronization with the Controller

Overlap Commands and Sequential Commands

There are two types of commands: overlap and sequential.
With overlap commands, the execution of the next command may start before the execution of the previous command is finished.
With sequential commands, the execution of the next command is held until the execution of the previous command is finished (even if multiple commands are sent consecutively).
All LS3300 commands are sequential commands. Even when only sequential commands are available, there are times when it is necessary to achieve synchronization to properly query the output voltage or current. For example, if you want to change the output and query the most recent output value, sending `:SOURce:VOLTage:OUTPut?` or `:SOURce:CURRent:OUTPut?` at arbitrary times will cause the LS3300 to return values even before the specified output is reached. This means that the correct output after the change may not be received. If this happens, you must use the following method to synchronize to the point in time when the new output value is reached.

Achieving Synchronization without Using Overlap Commands

- **Using the STATus:CONDition? Query**
  `STATus:CONDition?` is used to query the contents of the condition register (see section 14.4). To determine whether the output value is stable, you can read bit 4 of the condition register for the voltage output and bit 5 of the condition register for the current output. If bit 4 or 5 of the condition register is 1, the voltage output or current output is in transition. If it is 0, the output is stable.

Example
```
:SOURce:VOLTage:
LEVel 1000V<PMT>
:STATus:CONDition?<PMT>
```
(Read the response. If the bit 4 is 1, return to the previous line.)
```
:SOURce:VOLTage:OUTPut?<PMT>
```
`:SOURce:VOLTage:OUTPut?` is not executed until bit 4 in the condition register becomes 0.

- **Using the Extended Event Register**
  The changes in the condition register can be reflected in the extended event register (see section 12.4).

Example
```
:STATus:FILTer5
FALL;:STATus:EESE 16; EESR?;
*SRE 8;:SOURce:VOLTage:
LEVel 1000V <PMT>
```
(Read the response to `:STATus:EESR?`)
(Wait for a service request)
```
:SOURce:VOLTage:OUTPut?<PMT>
```
The `:STATus:FILTer5 FALL` command sets the transition filter so that bit 4 in the extended event is set to 1 when bit 4 in the condition register changes from 1 to 0.

The `:STATus:EESE 5` command is used to only change the status byte based on bit 4 in the extended event register.
The `:STATus:EESR?` command is used to clear the extended event register.
The `*SRE 8` command is used to generate service requests based only on the changes in the extended event register bits.
The `:SOURce:VOLTage:OUTPut?` command is not executed until a service request is generated.

- **Using the COMMunicate:WAIT Command**
  The `COMMunicate:WAIT` command is used to wait for a specific event to occur.

Example
```
:STATus:FILTer5 FALL;:STATus:
EESE 16; EESR?;*SRE 8;
:SOURce:VOLTage:LEVel 1000V
```
(Read the response to `:STATus:EESR?`)
```
:COMMunicate:WAIT #H0010;
:SOURce:VOLTage:OUTPut?
<PMT>
```
For a description of `:STATus:FILTer5 FALL` and `:STATus:EESR?`, see the previous section about the extended event register.
The `:COMMunicate:WAIT #H0010` command specifies that the program will wait for bit 4 in the extended event register to be set to `1`.
`:SOURce:VOLTage:OUTPut?` is not executed until bit 4 in the extended event register becomes 1.

List of Commands

Command	Function	Page
COMMunicate Group		
:COMMunicate?	Queries all communication settings.	11-4
:COMMunicate:HEADer	Sets or queries whether headers are attached to query responses.	11-4
:COMMunicate:VERBose	Sets or queries whether the response to a query is returned fully spelled out or in its abbreviated form.	11-4
:COMMunicate:WAIT	Waits for a specified extended event to occur.	11-4
:COMMunicate:WAIT?	Creates the response that is returned when a specified extended event occurs.	11-4
OSCillator Group		
:OSCillator?	Queries all settings related to the reference signal.	11-5
:OSCillator:SOURce	Sets or queries the internal/external setting of the reference signal.	11-5
:OSCillator:FREQuency	Sets or queries the internal reference signal frequency.	11-5
:OSCillator:READ?	Queries the output frequency.	11-5
OUTPut Group		
:OUTPut[:STATe]	Sets or queries the output's on/off state.	11-6
:OUTPut:SELEct?	Queries all settings related to the SELECT function.	11-6
:OUTPut:SELEct:VOLTage<x>	Sets or queries SELECT ON/OFF state of the voltage output.	11-6
:OUTPut:SELEct:CURRent<x>	Sets or queries the SELECT ON/OFF state of the current output.	11-6
:OUTPut:STABilizing:VOLTage	Queries whether the output signal of the voltage output is in transition.	11-6
:OUTPut:STABilizing:CURRent	Queries whether the output signal of the current output is in transition.	11-6
SOURce Group		
:SOURce?	Queries all source settings.	11-7
:SOURce:VOLTage?	Queries all voltage source settings.	11-7
:SOURce:VOLTage:RANGe	Sets or queries the voltage range.	11-7
:SOURce:VOLTage:LEVel[:VALue]	Sets or queries the voltage output setting.	11-7
:SOURce:VOLTage:LEVel:RATio	Sets or queries the voltage output ratio.	11-7
:SOURce:VOLTage:PHASe[:VALue]	Sets or queries the voltage output phase.	11-7
:SOURce:VOLTage:OUTPut?	Queries the voltage output level of the voltage output.	11-7
:SOURce:CURRent?	Queries all current (current sensor signal voltage) source settings.	11-7
:SOURce:CURRent:RANGe	Sets or queries the current (current sensor signal voltage) source range.	11-7
:SOURce:CURRent:LEVel[:VALue]	Sets or queries the current (current sensor signal voltage) output setting.	11-8
:SOURce:CURRent:LEVel:RATio	Sets or queries the current (current sensor signal voltage) output ratio.	11-8
:SOURce:CURRent:PHASe[:VALue]	Sets or queries the current (current sensor signal voltage) output phase.	11-8
:SOURce:CURRent:SENSor:RATio	Sets or queries the conversion ratio of the current sensor signal output.	11-8
:SOURce:CURRent:OUTPut?	Queries the current output level of the current output.	11-8
:SOURce:PFACtor?	Queries all settings related to the power factor.	11-8
:SOURce:PFACtor:PHASe	Queries the phase difference between the current and voltage.	11-8
:SOURce:PFACtor:POLarity	Queries the lead or lag of the power factor.	11-8
:SOURce:PFACtor:VALue	Sets or queries the power factor.	11-9
:SOURce:POWer:OUTPut?	Queries the active power and reactive power of the voltage output.	11-9

Command	Function	Page
STATus Group		
:STATus?	Queries all the settings of the communication status feature.	11-10
:STATus:CONDition?	Queries the contents of the condition register.	11-10
:STATus:EESE	Sets or queries the extended event enable register.	11-10
:STATus:EESR?	Queries the contents of the extended event register and clears the register.	11-10
:STATus:ERRor?	Queries the error code and message of the last error that has occurred (top of the error queue).	11-10
:STATus:FILTer<x>	Sets or queries the transition filter.	11-10
:STATus:QENable	Sets or queries whether messages other than errors will be stored to the error queue.	11-10
:STATus:QMESsage	Sets or queries whether message information will be attached to the response to the STATus:ERRor? query.	11-10
:STATus:EMERgency<x>	Queries whether a device error has occurred.	11-11
:STATus:TRIP<x>:FACTor?	Queries whether something has tripped.	11-11
:STATus:TRIP<x>:CURRent?	Queries whether the current output has tripped.	11-11
:STATus:TRIP<x>:OSCillator?	Queries whether an external reference signal error was detected.	11-12
:STATus:TRIP<x>:VOLTage?	Queries whether the voltage output has tripped.	11-12
SWEep Group		
:SWEep?	Queries all sweep settings.	11-13
:SWEep:DIRection:VOLTage	Executes or queries the voltage sweep state.	11-13
:SWEep:DIRection:CURRent	Executes or queries the current sweep state.	11-13
:SWEep:TIME	Sets or queries the sweep speed.	11-13
:SWEep:RANGe[:UPPer]	Sets or queries the upper limit of the speed range.	11-13
SYSTem Group		
:SYSTem?	Queries all the system settings.	11-14
:SYSTem:BEEP	Sets or queries the beep sound on/off state.	11-14
:SYSTem:DISPlay?	Queries all the display settings.	11-14
:SYSTem:DISPlay:STATe	Sets or queries the display on/off state.	11-14
:SYSTem:DISPlay:BRIGhtness	Sets or queries the display backlight brightness.	11-14
:SYSTem:EARTh?	Queries all the grounding settings.	11-14
:SYSTem:EARTh:CURRent<x>	Sets or queries the grounding on/off state of the current output terminals.	11-14
:SYSTem:EARTh:VOLTage<x>	Sets or queries the grounding on/off state of the voltage output terminals.	11-14
:SYSTem:COMMunicate	Queries all the communication settings.	11-15
:SYSTem:COMMunicate:GPIB?	Queries all GPIB communication settings.	11-15
:SYSTem:COMMunicate:GPIB:ADDRess	Sets or queries the GP-IB address.	11-15
:SYSTem:COMMunicate:ETHernet?	Queries all the Ethernet communication settings.	11-15
:SYSTem:COMMunicate:ETHernet:DHCP	Sets or queries the Ethernet DHCP on/off state.	11-15
:SYSTem:COMMunicate:ETHernet:IP	Sets or queries the Ethernet IP address.	11-15
:SYSTem:COMMunicate:ETHernet:MASK	Sets or queries the Ethernet subnet mask.	11-15
:SYSTem:COMMunicate:ETHernet:GATEway	Sets or queries the Ethernet default gateway.	11-15
:SYSTem:COMMunicate:ETHernet:MACaddress	Sets or queries the Ethernet MAC address.	11-15
:SYSTem:INSTrument:NUMBer<x>	Queries the instrument's serial number.	11-15
:SYSTem:INSTrument:STATe<x>?	Queries the instrument's status.	11-16
:SYSTem:INSTrument:ERRor<x>?	Queries the instrument's error.	11-16
:SYSTem:PCHart	Sets or queries the display format of the phase chart.	11-16
:SYSTem:REBoot	Restarts the instrument when the specified time elapses.	11-16
WIRing Group		
:WIRing?	Queries all WIRing settings.	11-17
:WIRing:PRIority	Sets or queries the priority unit.	11-17
:WIRing:TYPE	Sets or queries the wiring system.	11-17

Command	Function	Page
Common Command Group		
*CLS	Clears the standard event register, extended event register, and error queue.	11-18
*ESE	Sets or queries the standard event enable register.	11-18
*ESR?	Queries and clears the standard event register.	11-18
*IDN?	Queries the instrument model.	11-18
*OPC	Sets bit 0 (the OPC bit) of the standard event register to 1 upon the completion of the specified overlap command.	11-18
*OPC?	Returns ASCII code 1 if the specified overlap command has finished.	11-18
*OPT?	Queries the installed options.	11-18
*RST	Initializes settings.	11-19
*SRE	Sets or queries the service request enable register value.	11-19
*STB?	Queries the Status Byte Register value.	11-19
*TST?	Executes a self-test and queries the result.	11-19
*WAI	Holds the execution of the subsequent command until the completion of the specified overlap command.	11-19

11.2 COMMunicate Group

The commands in this group deal with communications.
There are no front panel keys that correspond to the commands in this group.

:COMMunicate?

Function Queries all communication settings.

Syntax `:COMMunicate?`

:COMMunicate:HEADer

Function Sets or queries whether headers are attached to query responses.

Syntax `:COMMunicate:HEADer <Boolean>`
`:COMMunicate:HEADer?`
ON|1: Headers are attached.
OFF|0: Headers are not attached.

Example
```
:COMMUNICATE:HEADER ON
:COMMUNICATE:HEADER?
-> :COMMUNICATE:HEADER 1
```

:COMMunicate:VERBose

Function Sets or queries whether the response to a query is returned fully spelled out or in its abbreviated form.

Syntax `:COMMunicate:VERBose <Boolean>`
`:COMMunicate:VERBose?`
ON|1: Returned fully spelled out
OFF|0: Returned in abbreviated form

Example
```
:COMMUNICATE:VERBOSE ON
:COMMUNICATE:VERBOSE?
-> :COMMUNICATE:VERBOSE 1
```

Description
- Example of a response fully spelled out
  `:CALIBRATE:RANGE 1.0E+00`
- Example of a response in abbreviated form
  `:CAL:RANG 1.0E+00`

:COMMunicate:WAIT

Function Waits for a specified extended event to occur.

Syntax `:COMMunicate:WAIT <Register>`
<Register> = 0 to 65535

Example `:COMMUNICATE:WAIT #H0008`

Description
- For details on how to use the :COMMunicate:WAIT command to achieve synchronization, see section 10.5.
- For details on the extended event register, see section 12.4.

:COMMunicate:WAIT?

Function Creates the response that is returned when a specified extended event occurs.

Syntax `:COMMunicate:WAIT? <Register>`
<Register> = 0 to 65535

Example `:COMMUNICATE:WAIT? 65535 -> 1`

Description For details on the extended event register, see section 12.4.

11.3 OSCillator Group

The commands in this group deal with the reference signal settings.

:OSCillator?

Function Queries all settings related to the reference signal.

Syntax `:OSCillator?`

:OSCillator:SOURce

Function Sets or queries the internal/external setting of the reference signal.

Syntax
```
:OSCillator:SOURce INTernal|
EXTernal|LINE
INTernal: Internal signal
EXTernal: External signal
LINE: Power supply line signal
```

Example
```
:OSCILLATOR:SOURCE INT
:OSCILLATOR:SOURCE? ->
:OSCILLATOR:SOURCE INTERNAL
```

:OSCillator:FREQuency

Function Sets or queries the internal reference signal frequency.

Syntax
```
:OSCillator:FREQuency
{<Frequency>|MINimum|MAXimum}
<Frequency>: Internal frequency 40
Hz to 1200 Hz, (resolution: 0.001
Hz)
MINimum: Minimum in the selectable
range
MAXimum: Maximum in the selectable
range
```

Example
```
:OSCILLATOR:FREQUENCY 40
:OSCILLATOR:FREQUENCY?
:OSCILLATOR:FREQUENCY 40.000E+00
```

:OSCillator:READ?

Function Queries the output frequency.

Syntax `:OSCillator:READ?`

Example
```
:OSCILLATOR:READ? ->
:OSCILLATOR:READ 40.000
```

Description `If the value is outside the measuring range, the command returns 9.91E+37.`

11.4 OUTPut Group

The command in this group deals with the output on/off setting. The commands correspond to the front panel OUTPUT key.

:OUTPut[:STATe]

Function Sets or queries the output's on/off state.

Syntax
```
:OUTPut:STATe <Boolean>
:OUTPut?
```
ON|1: Enabled
OFF|0: Disabled

Example
```
:OUTPUT ON
:OUTPUT? -> :OUTPUT 1
```

:OUTPut:SELEct?

Function Queries all settings related to the SELECT function.

Syntax
```
:OUTPut:SELEct?
```

:OUTPut:SELEct:VOLTage<x>

Function Sets or queries SELECT ON/OFF state of the voltage output.

Syntax
```
[:OUTPut]:SELEct:VOLTage<x>
<Boolean>
[:OUTPut]:SELEct:VOLTage?
```
<x>: Unit number (can be omitted, assumed to be 1 if omitted)
ON|1: Enabled
OFF|0: Disabled

Example
```
:OUTPUT:SELEct:VOLTage1 ON
:OUTPUT:SELEct:VOLTage1? ->
:OUTPUT:SELEct:VOLTage1 1
```

Description If a unit number outside the controllable target range is specified depending on the wiring system and priority unit, an error (221: Setting conflict) will occur.

:OUTPut:SELEct:CURRent<x>

Function Sets or queries the SELECT ON/OFF state of the current output.

Syntax
```
[:OUTPut]:SELEct:CURRent<x>
<Boolean>
[:OUTPut]:SELEct:CURRent?
```
<x>: Unit number (can be omitted, assumed to be 1 if omitted)
ON|1: Enabled
OFF|0: Disabled

Example
```
:OUTPUT:SELEct:CURRent1 ON
:OUTPUT:SELEct:CURRent1? ->
:OUTPUT:SELEct:CURRent1 1
```

Description If a unit number outside the controllable target range is specified depending on the wiring system and priority unit, an error (221: Setting conflict) will occur.

:OUTPut:STABilizing:VOLTage

Function Queries whether the output signal of the voltage output is in transition.

Syntax
```
:OUTPut:STABilizing:VOLTage?
```
1: Output in transition
0: Output not in transition

Example
```
:OUTPUT:STABilizing:VOLTage?  ->
:OUTPUT:STABILIZING:VOLTage 1
```

:OUTPut:STABilizing:CURRent

Function Queries whether the output signal of the current output is in transition.

Syntax
```
:OUTPut:STABilizing:CURRent?
```
1: Output in transition
0: Output not in transition

Example
```
:OUTPUT:STABilizing:CURRent?  ->
:OUTPUT:STABILIZING:CURRENT 1
```

11.5 SOURce Group

The commands in this group deal with voltage and current range settings and output display. The commands correspond to the front panel V or I key.

:SOURce?

Function Queries all source settings.

Syntax `:SOURce?`

:SOURce:VOLTage?

Function Queries all voltage source settings.

Syntax `:SOURce:VOLTage?`

:SOURce:VOLTage:RANGe

Function Sets or queries the voltage range.

Syntax `:SOURce:VOLTage:RANGe <Voltage>`
<Voltage> = 1,10,30,100,300,1000 (V)

Example
```
:SOURCE:VOLTage:RANGE 1
:SOURCE:VOLTAGE:RANGE? ->
:SOURCE:VOLTAGE:RANGE 1.0E+00
```

:SOURce:VOLTage:LEVel[:VALue]

Function Sets or queries the voltage output setting.

Syntax
```
:SOURce:VOLTage:LEVel[:VALue]
{<Voltage>|MINimum|MAXimum}
:SOURce:VOLTage:LEVel[:VALue]?
```
<Voltage>: Voltage
MINimum: Minimum in the selectable range
MAXimum: Maximum in the selectable range

Example
```
:SOURCE:VOLTAGE:LEVEL:VALUE 1V
:SOURCE:VOLTAGE:LEVEL:VALUE? ->
1.00000E+00
```

:SOURce:VOLTage:LEVel:RATio

Function Sets or queries the voltage output ratio.

Syntax
```
:SOURce:VOLTage:LEVel:RATio
{<Percent>|MINimum|MAXimum}
:SOURce:VOLTage:LEVel:RATio?
```
<Percent>: Percentage of the voltage output
0.000% to 120.000% (resolution: 0.001%)
MINimum: Minimum in the selectable range
MAXimum: Maximum in the selectable range

Example
```
:SOURCE:VOLTAGE:LEVEL:RATIO 100
:SOURCE:VOLTAGE:LEVEL:RATIO? ->
100.000
```

:SOURce:VOLTage:PHASe[:VALue]

Function Sets or queries the voltage output phase.

Syntax
```
:SOURce:VOLTage:PHASe[:VALue]
{<Phase>|MINimum|MAXimum}
:SOURce:VOLTage:PHASe[:VALue]?
```
<Phase>: Phase relative to the voltage output's reference signal -180.000° to +359.999° (resolution: 0.001°)
MINimum: Minimum in the selectable range
MAXimum: Maximum in the selectable range

Example
```
:SOURCE:VOLTAGE:PHASE:VALUE 0.0
:SOURCE:VOLTAGE:PHASE:VALUE? -> 0.0
```

Description
- If a value outside the range is specified, it is normalized within the range of -180.000° to +180.000°.
- If the wiring system is not single-phase two-wire, an error (setting conflict) will occur.

:SOURce:VOLTage:OUTPut?

Function Queries the voltage output level of the voltage output.

Syntax `:SOURce:VOLTage:OUTPut?`

Example
```
:SOURce:VOLTAGE:OUTPUT? ->
1.00000E+00
(mantissa up to 6 digits, exponent
up to 2 digits)
```

:SOURce:CURRent?

Function Queries all current (current sensor signal voltage) source settings.

Syntax `:SOURce:CURRent?`

:SOURce:CURRent:RANGe

Function Sets or queries the current (current sensor signal voltage) source range.

Syntax
```
:SOURce:CURRent:RANGe
{<Current>|AUX,<Voltage>}
```
<Current> = 30m,100m, 1, 10, 50, 100, 150 (A)
<Voltage> = 500 m ,5 (V)

Example
```
:SOURCE:CURRENT:RANGE 1
:SOURCE:CURRENT:RANGE? ->
:SOURCE:CURRENT:RANGE 1.0E+00
:SOURCE:CURRENT:RANGE AUX,500mV
:SOURCE:CURRENT:RANGE? ->
:SOURCE:CURRENT:RANGE AUX,500.0E-03
```

Description 100A and 150A can be specified when the wiring system is 1P2W (HI Current). If the wiring system is not 1P2W (HI Current), an error (setting conflict) will occur.

:SOURce:CURRent:LEVel[:VALue]

Function Sets or queries the current (current sensor signal voltage) output setting.

Syntax
```
:SOURce:CURRent:LEVel[:VALue] {<Current>|<Voltage>|MINimum|MAXimum}
:SOURce:CURRent:LEVel[:VALue]?
```
<Current>: Current
<Voltage>: Voltage
MINimum: Minimum in the selectable range
MAXimum: Maximum in the selectable range

Example
```
:SOURCE:CURRENT:LEVEL:VALUE 1A
:SOURCE:CURRENT:LEVEL:VALUE? ->
1.00000E+00
:SOURCE:CURRENT:LEVEL:VALUE 500mV
:SOURCE:CURRENT:LEVEL:VALUE? ->
500.000E-03
```

Description <Current> can be specified when the current range is set to 30mA, 100mA, 1A, 10A, or 50A. If the external sensor range is selected, an error will occur.
<Voltage> can be specified when the current range is set to 500mV or 5V. Otherwise, an error (setting conflict) will occur.

:SOURce:CURRent:LEVel:RATio

Function Sets or queries the current (current sensor signal voltage) output ratio.

Syntax
```
:SOURce:CURRent:LEVel:RATio {<Percent>|MINimum|MAXimum}
:SOURce:CURRent:LEVel:RATio?
```
<Percent>: Percentage of the current output 0.000% to 120.000% (resolution: 0.001%)
MINimum: Minimum in the selectable range
MAXimum: Maximum in the selectable range

Example
```
:SOURCE:CURRENT:LEVEL:RATIO 100
:SOURCE:CURRENT:LEVEL:RATIO? ->
100.000
```

:SOURce:CURRent:PHASe[:VALue]

Function Sets or queries the current (current sensor signal voltage) output phase.

Syntax
```
:SOURce:CURRent:PHASe[:VALue] {<Phase>|MINimum|MAXimum}
:SOURce:CURRent:PHASe[:VALue]?
```
<Phase>: Phase relative to the current output's reference signal -180.000° to +359.999° (resolution: 0.001°)
MINimum: Minimum in the selectable range
MAXimum: Maximum in the selectable range

Example
```
:SOURCE:CURRENT:PHASE:VALUE 0.0
:SOURCE:CURRENT:PHASE:VALUE? -> 0.0
```

Description If a value outside the range is specified, it is normalized within the range of -180.000° to +180.000°.

:SOURce:CURRent:SENSor:RATio

Function Sets or queries the conversion ratio of the current sensor signal output.

Syntax
```
:SOURce:CURRent:SENSor:RATio<NRf>
:SOURce:CURRent:SENSor:RATio?
```
<NRf>: Ratio for converting into current 0.0001 to 99999.9999 (resolution: 0.0001 mV/A)
MINimum: Minimum in the selectable range
MAXimum: Maximum in the selectable range

Example
```
:SOURCE:CURRENT:SENSOR:RATIO 1.0000
:SOURCE:CURRENT:SENSOR:RATIO? ->
1.0000
```

:SOURce:CURRent:OUTPut?

Function Queries the current output level of the current output.

Syntax
```
:SOURce:CURRent:OUTPut?
```

Example
```
:SOURCE:CURRENT:OUTPUT? ->
1.00000E+00
(mantissa up to 6 digits, exponent
up to 2 digits)
```

:SOURce:PFACtor?

Function Queries all settings related to the power factor.

Syntax
```
:SOURce:PFACtor?
```

:SOURce:PFACtor:PHASe

Function Queries the phase difference between the current and voltage.

Syntax
```
:SOURce:PFACtor:PHASe {<Phase>|MINimum|MAXimum}
:SOURce:PFACtor:PHASe?
```
<Phase>: Phase relative to the current output's reference signal -180.000° to +359.999° (resolution: 0.001°)
MINimum: Minimum in the selectable range
MAXimum: Maximum in the selectable range

Example
```
:SOURCE:PFACTOR:PHASE 0.0
:SOURCE:PFACTOR:PHASE? -> 0.0
```

:SOURce:PFACtor:POLarity

Function Queries the lead or lag of the power factor.

Syntax
```
:SOURce:PFACtor:POLarity LEAD|LAG
:SOURce:PFACtor:POLarity?
```
LEAD: Lead
LAG: Lag

Example
```
:SOURCE:PFACTOR:POLARITY LEAD
:SOURCE:PFACTOR:POLARITY? -> LEAD
```

:SOURce:PFACtor:VALue

Function Sets or queries the power factor.

Syntax
```
:SOURce:PFACtor:VALue {<Power
factor>|MINimum|MAXimum}
:SOURce:PFACtor:VALue?
```
<Power factor>: Power factor -1.0000 to 1.0000 (resolution: 0.0001)
MINimum: Minimum in the selectable range
MAXimum: Maximum in the selectable range

Example
```
:SOURCE:PFACTOR:VALUE 1.0000
:SOURCE:PFACTOR:VALUE? -> 1.0000
```

:SOURce:POWer:OUTPut?

Function Queries the active power and reactive power of the voltage output.

Syntax
```
:SOURce:POWer:OUTPut? ->
<Active power>,<Reactive power>
```

Example
```
:SOURCE:POWER:OUTPUT? ->
1.006135E+03, 1.006135E+03
(mantissa up to 7 digits, exponent
up to 2 digits)
```

11.6 STATus Group

The commands in this group are used to make settings and queries related to the communication status feature.
There are no front panel keys that correspond to the commands in this group.
For information about status reports, see chapter 12.

:STATus?

Function Queries all the settings of the communication status feature.
Syntax `:STATus?`

:STATus:CONDition?

Function Queries the contents of the condition register.
Syntax `:STATus:CONDition?`
Example `:STATUS:CONDITION?`
`-> :STATUS:CONDITION 16`
Description For information about the condition register, see chapter 12, “Status Reports.”

:STATus:EESE

Function Sets or queries the extended event enable register.
Syntax `:STATus:EESE {<Register>}`
`:STATus:EESE?`
<Register> = 0 to 65535
Example `:STATUS:EESE #7659`
`:STATUS:EESE? -> :STATUS:EESE #7659`
Description For information about the extended event enable register, see chapter 12, “Status Reports.”

:STATus:EESR?

Function Queries the contents of the extended event register and clears the register.
Syntax `:STATus:EESR?`
Example `:STATUS:EESR? -> :STATUS:EESR 1`
Description For information about the extended event register, see chapter 12, “Status Reports.”

:STATus:ERRor?

Function Queries the error code and message of the last error that has occurred (top of the error queue).
Syntax `:STATus:ERRor?`
Example `:STATUS:ERROR?`
`-> 113,"Undefined header"`

:STATus:FILTer<x>

Function Sets or queries the transition filter.
Syntax `:STATus:FILTer<x> {BOTH|FALL|NEVer|RISE}`
`:STATus:FILTer<x>?`
<x> = 1 to 16
Example `:STATUS:FILTER2 RISE`
`:STATUS:FILTER2?`
`-> :STATUS:FILTER1 RISE`
Description For information about the transition filter, see chapter 12, “Status Reports.”

:STATus:QENable

Function Sets or queries whether messages other than errors will be stored to the error queue.
Syntax `:STATus:QENable {<Boolean>}`
`:STATus:QENable?`
Example `:STATUS:QENABLE ON`
`:STATUS:QENABLE?`
`-> :STATUS:QENABLE 1`

:STATus:QMESsage

Function Sets or queries whether message information will be attached to the response to the STATus:ERRor? query.
Syntax `:STATus:QMESsage {<Boolean>}`
`:STATus:QMESsage?`
Example `:STATUS:QMESSAGE OFF`
`:STATUS:QMESSAGE?`
`-> :STATUS:QMESSAGE 0`

:STATus:EMERgency<x>

Function Queries whether a device error has occurred.

Syntax `:STATus:EMERgency<x>?`

<x>: Unit number (can be omitted, assumed to be 1 if omitted)

Example `:STATus:EMERgency1? -> :STATUS:EMER1 31`

Description

Bit No	Name	Description
0	NMI	Set to 1 when the NMI stops.
1	FAN Stop	Set to 1 when the fan stops.
2	Temprature Error	Set to 1 when an abnormal internal temperature is detected.
3	Amplitude Temprature Error	Set to 1 when an abnormal amplifier temperature is detected.
4	Internal Power Error	Set to 1 when an internal power supply error is detected.
5	USB-Host Over Current	Set to 1 when an abnormal USB-Host overcurrent is detected.
6	-	Always zero
7	-	Always zero
8	-	Always zero
9	-	Always zero
10	-	Always zero
11	-	Always zero
12	-	Always zero
13	-	Always zero
14	-	Always zero
15	-	Always zero

:STATus:TRIP<x>:FACTor?

Function Queries whether something has tripped.

Syntax `:STATus:TRIP<x>:FACTor?`

<x>: Unit number (can be omitted, assumed to be 1 if omitted)

Example `:STATus:TRIP1:FACTor? -> :STATUS:TRIP1:FACTor 31`

Description

Bit No	Name	Description
0	VOUE (Voltage Output Uncontrol Error)	Set to 1 when a voltage amplitude control error is detected.
1	VOSC (Voltage Oscillating)	Set to 1 when a voltage output oscillation error is detected.
2	VLMT (Voltage Limiting)	Set to 1 when an excessive current is detected as a result of connecting an excessive load to the voltage output terminals.
3	IOUE (Current Output Uncontrol Error)	Set to 1 when a current amplitude control error is detected.
4	IOSC (Current Oscillating)	Set to 1 when a current output oscillation error is detected.
5	ILMT (Current Limiting)	Set to 1 when an excessive voltage is detected as a result of connecting an excessive load to the current output terminals.
6	-	Always zero
7	-	Always zero
8	EXT(External Input Signal Error)	Set to 1 when an external input signal (reference signal) error is detected
9	-	Always zero
10	-	Always zero
11	-	Always zero
12	-	Always zero
13	-	Always zero
14	-	Always zero
15	-	Always zero

:STATus:TRIP<x>:CURRent?

Function Queries whether the current output has tripped.

Syntax `:STATus:TRIP<x>:CURRent?`

<x>: Unit number (can be omitted, assumed to be 1 if omitted)

1: Tripping detected

0: Tripping not detected

Example `:STATus:TRIP1:CURRent? -> :STATus:TRIP1:CURRENT 1`

:STATus:TRIP<x>:OSCillator?

Function Queries whether an external reference signal error was detected.

Syntax `:STATus:TRIP<x>:OSCillator?`

<x>: Unit number (can be omitted, assumed to be 1 if omitted)

1: Error detected

0: Error not detected

Example `:STATus:TRIP1:OSCillator? ->`
`:STATus:TRIP1:OSCILLATOR 1`

:STATus:TRIP<x>:VOLTage?

Function Queries whether the voltage output has tripped.

Syntax `:STATus:TRIP<x>:VOLTage?`

<x>: Unit number (can be omitted, assumed to be 1 if omitted)

1: Tripping detected

0: Tripping not detected

Example `:STATus:TRIP1:VOLTage? ->`
`:STATus:TRIP1:VOLTAGE 1`

11.7 SWEep Group

The commands in this group deal with the sweep settings. There are no front panel keys that correspond to the commands in this group.

:SWEep?

Function Queries all sweep settings.

Syntax `:SWEep?`

:SWEep:DIRection:VOLTage

Function Executes or queries the voltage sweep state.

Syntax
```
:SWEep:DIRection:VOLTage
{HOLD|UP|DOWN}
:SWEep:DIRection:VOLTage?
```
HOLD: Sweeping held.
UP: Sweep up
DOWN: Sweep down

Example
```
:SWEep:DIRection:VOLTAGE UP
:SWEep:DIRection:VOLTAGE? -> UP
```

:SWEep:DIRection:CURRent

Function Executes or queries the current sweep state.

Syntax
```
:SWEep:DIRection:CURRent
{HOLD|UP|DOWN}
:SWEep:DIRection:CURRent?
```
HOLD: Sweeping held.
UP: Sweep up
DOWN: Sweep down

Example
```
:SWEep:DIRection:CURRENT UP
:SWEep:DIRection:CURRENT? -> UP
```

:SWEep:TIME

Function Sets or queries the sweep speed.

Syntax
```
:SWEep:TIME <Time>
:SWEep:TIME?
<Time>: 8, 16, 32, 64 (S)
```

Example
```
:SWE:TIME 16S
:SWE:TIME?  ->  16
```

:SWEep:RANGe[:UPPer]

Function Sets or queries the upper limit of the speed range.

Syntax
```
:SWEep:RANGe[:UPPer] <Percent>
:SWEep:RANGe[:UPPer]?
```
<Percent> =
100PCT:100%
105PCT:105%
110PCT:110%
120PCT:120%

Example
```
:SWE:RANGe 100PCT
:SWE:RANGe? -> 100
```

11.8 SYSTem Group

The commands in this group deal with communication, ground condition, and beep settings. The command corresponds to the front panel UTILITY key.

:SYSTem?

Function Queries all the system settings.

Syntax `:SYSTem?`

:SYSTem:BEEP

Function Sets or queries the beep sound on/off state.

Syntax `:SYSTem:BEEP <Boolean>`
`:SYSTem:BEEP?`

Example `:SYST:BEEP ON`
`:SYST:BEEP? -> :SYSTEM:BEEP 1`

:SYSTem:DISPlay?

Function Queries all the display settings.

Syntax `:SYSTem:DISPlay`

Example `:SYST:DISP? -> . . .`

:SYSTem:DISPlay:STATe

Function Sets or queries the display on/off state.

Syntax `:SYSTem:DISPlay:STATe <Boolean>`
`:SYSTem:DISPLay:STATe?`

Example `:SYST:DISP:STAT ON`
`:SYST:DISP:STAT? ->`
`:SYSTEM:DISPLAY:STATE 1`

Description When the display is set to off, the LCD backlight is turned off, and the LCD becomes entirely black.

:SYSTem:DISPlay:BRIGhtness

Function Sets or queries the display backlight brightness.

Syntax `:SYSTem:DISPlay:BRIGhtness <NRf>`
`:SYSTem:DISPlay:BRIGhtness?`
<NRf> = 0 to 10

Example `:SYST:DISP:BRIG 10`
`:SYST:DISP:BRIG? ->`
`:SYSTEM:DISPLAY:BRIGHTNESS 10`

Description Backlight brightness is dark when set to 0 and bright when set to 10.

:SYSTem:EARTh?

Function Queries all the grounding settings.

Syntax `:SYSTem:EARTh?`

Example `:SYST:EARTh? ->`
`:SYSTEM:EARTh:CURRent 1; VOLTage 1`

:SYSTem:EARTh:CURRent<x>

Function Sets or queries the grounding on/off state of the current output terminals.

Syntax `:SYSTem:EARTh:CURRent<x> <Boolean>`
`:SYSTem:EARTh:CURRent<x>?`
<x>: Unit number (can be omitted, assumed to be 1 if omitted)
ON|1: Ground
OFF|0: Not ground

Example `:SYST:EARTh:CURRent1 ON`
`:SYST:EARTh:CURRent1? ->`
`:SYSTEM:EARTh:CURRent1 1`

:SYSTem:EARTh:VOLTage<x>

Function Sets or queries the grounding on/off state of the voltage output terminals.

Syntax `:SYSTem:EARTh:VOLTage<x> <Boolean>`
`:SYSTem:EARTh:VOLTage<x>?`
<x>: Unit number (can be omitted, assumed to be 1 if omitted)
ON|1: Ground
OFF|0: Not ground

Example `:SYST:EARTh:VOLTage1 ON`
`:SYST:EARTh:VOLTage1? ->`
`:SYSTEM:EARTh:VOLTage1 1`

:SYSTem:COMMunicate

Function Queries all the communication settings.

Syntax `:SYSTem:COMMunicate?`

Example `:SYST:COMM? -> . . .`

:SYSTem:COMMunicate:GPIB?

Function Queries all GPIB communication settings.

Syntax `:SYSTem:COMMunicate:GPIB?`

Example `:SYST:COMM:GPIB? -> . . .`

:SYSTem:COMMunicate:GPIB:ADDRess

Function Sets or queries the GP-IB address.

Syntax `:SYSTem:COMMunicate:GPIB:ADDRess <NRf>`
`:SYSTem:COMMunicate:GPIB:ADDRess?`
<NRf> = 0 to 30 (resolution: 1), GP-IB address

Example `:SYST:COMM:GPIB:ADDR 1`
`:SYST:COMM:GPIB:ADDR? -> :SYSTEM:COMMUNICATE:GPIB:ADDRESS 1`

:SYSTem:COMMunicate:ETHernet?

Function Queries all the Ethernet communication settings.

Syntax `:SYSTem:COMMunicate:ETHernet?`

Example `:SYST:COMMETH? -> . . .`

:SYSTem:COMMunicate:ETHernet:DHCP

Function Sets or queries the Ethernet DHCP on/off state.

Syntax `:SYSTem:COMMunicate:ETHernet:DHCP <Boolean>`
`:SYSTem:COMMunicate:ETHernet:DHCP?`

Example `:SYST:COMM:ETH:DHCP ON`
`:SYST:COMM:ETH:DHCP? ->`
`:SYSTEM:COMMUNICATE:ETHERNET:DHCP 1`

:SYSTem:COMMunicate:ETHernet:IP

Function Sets or queries the Ethernet IP address.

Syntax `:SYSTem:COMMunicate:ETHernet:IP <String>`
`:SYSTem:COMMunicate:ETHernet:IP?`
<String> = ”x.x.x.x” where x is a value between 0 and 255

Example `:SYST:COMM:ETH:IP “192.168.0.100”`
`:SYST:COMM:ETH:IP? ->`
`:SYSTEM:COMMUNICATE:ETHERNET:IP “192.168.0.1”`

:SYSTem:COMMunicate:ETHernet:MASK

Function Sets or queries the Ethernet subnet mask.

Syntax `:SYSTem:COMMunicate:ETHernet:MASK <String>`
`:SYSTem:COMMunicate:ETHernet:MASK?`
<String> = ”x.x.x.x” where x is a value between 0 and 255

Example `:SYST:COMM:ETH:MASK “255.255.255.0”`
`:SYST:COMM:ETH:MASK? ->`
`:SYSTEM:COMMUNICATE:ETHERNET:MASK “255.255.255.0”`

:SYSTem:COMMunicate:ETHernet:GATeway

Function Sets or queries the Ethernet default gateway.

Syntax `:SYSTem:COMMunicate:ETHernet:GATeway <String>`
`:SYSTem:COMMunicate:ETHernet:GATeway?`
<String> = ”x.x.x.x” where x is a value between 0 and 255

Example `:SYST:COMM:ETH:GAT “192.168.0.1”`
`:SYST:COMM:ETH:GAT? ->`
`:SYSTEM:COMMUNICATE:ETHERNET:GAT “192.168.0.1”`

:SYSTem:COMMunicate:ETHernet:MACaddress

Function Sets or queries the Ethernet MAC address.

Syntax `:SYSTem:COMMunicate:ETHernet:MACaddress?`
<String> = "00:00:64:xx:xx:xx” where xx is a value between 0 and FF

Example `:SYST:COMM:ETH:MAC`
`:SYST:COMM:ETH:MAC? ->`
`:SYSTEM:COMMUNICATE:ETHERNET:MAC “00:00:64:xx:xx:xx”`

:SYSTem:INSTrument:NUMBer<x>?

Function Queries the instrument’s serial number.

Syntax `:SYSTem:INSTrument:NUMBer?`
<String> = ” 123456789”

Example `:SYST:INST:NUMB1? ->`
`:SYSTEM:INSTRUMENT:NUMBER1 “123456789”`

Description If an instrument is not connected, <NONE> is returned.

:SYSTem:INSTrument:STATe<x>?

Function Queries the instrument's status.

Syntax `:SYSTem:INSTrument:STATe?`

<x>: Unit number (can be omitted, assumed to be 1 if omitted)

IGNore: Ignore (not a control target)

NORMal: Normal (the control target is controllable)

ABNormal: Abnormal (an error occurred in the controlled target and cannot be controlled)

Example `:SYST:INST:STAT2? ->`
`:SYSTEM:INSTRUMENT:STATE2 IGNORE`

Description If an instrument is not connected, IGNore is returned.

:SYSTem:INSTrument:ERRor<x>?

Function Queries the instrument's error.

Syntax `:SYSTem:INSTrument:ERRor?`

<x>: Unit number (can be omitted, assumed to be 1 if omitted)

Example `:SYSTEM:INSTRUMENT:ERROR2? ->`
`:SYSTEM:INSTRUMENT:ERROR2 1`

Bit No	Name	Description
0	Ans(Abnormal Structure)	Set to 1 when an instrument configuration error is detected
1	EXT(External Input Signal Error)	Set to 1 when an external input signal (reference signal) error is detected
2	-	Always zero
3	-	Always zero
4	-	Always zero
5	-	Always zero
6	-	Always zero
7	-	Always zero
8	-	Always zero
9	-	Always zero
10	-	Always zero
11	-	Always zero
12	-	Always zero
13	-	Always zero
14	-	Always zero
15	-	Always zero

:SYSTem:PCHart

Function Sets or queries the display format of the phase chart.

Syntax `:SYSTem:PCHart {TYPE1|TYPE2}`

TYPE1: Phase 0° (reference signal phase) points to the right for all wiring systems.

TYPE2: Phase 0° (reference signal phase) points up for all wiring systems.

Example `:SYSTem:PCHart TYPE1`
`:SYSTem:PCHart? -> TYPE1`

:SYSTem:REBoot

Function Restarts the instrument when the specified time elapses.

Syntax `:SYSTem:REBoot <NR1>`

<NR1> = 0s to 60 s (resolution: 1s). Time until the instrument restarts (s)

Example `:SYSTem:REB 3`

11.9 WIRing Group

The commands in this group deal with wiring systems. The commands correspond to the Wiring soft key.

:WIRing?

Function Queries all WIRing settings.

Syntax `WIRing?`

:WIRing:PRIority

Function Sets or queries the priority unit.

Syntax `:WIRing:PRIority {UNIT2|UNIT3}`
UNIT2: UNIT2 T phase reference
UNIT3:UNIT3 S phase reference

Example
```
:WIRing:PRIORITY UNIT2
:WIRing:PRIORITY? ->
:WIRING:PRIORITY UNIT3
```

:WIRing:TYPE

Function Sets or queries the wiring system.

Syntax `:WIRing:TYPE {P1W2|P1W3|P3W3|P3W4|V3A3|P1W2HC}`
P1W2 = Single-phase, two-wire system [1P2W]
P1W3 = Single-phase, three-wire system [1P3W]
P3W3 = Three-phase, three-wire system [3P3W]
P3W4 = Three-phase, four-wire system [3P3W]
V3A3 = Three-phase, three-wire system with a three-voltage, three-current method [3V3A]
P1W2HC: Single-phase two-wire [high current]

Example
```
:WIRing:TYPE P1W2
:WIRing:TYPE? ->
:WIRING:TYPE P3W3
```

Description If the wiring system is set to a system other than 1P2W HI Current when the current range is 100 A or 150 A, the current range is changed to the 50 A range.

11.10 Common Command Group

The commands in this group are defined in IEEE 488.2-1992 and are independent from the instrument's individual functions. There are no front panel dials and switches that correspond to the commands in this group.

*CLS

Function Clears the standard event register, extended event register, and error queue.

Syntax `*CLS`

Example `*CLS`

Description
- If the *CLS command is located immediately after the program message terminator, the output queue is also cleared.
- For information about each register and queue, see chapter 12.

*ESE

Function Sets or queries the standard event enable register.

Syntax `*ESE {<NRf>}`
`*ESE?`
<NRf> = 0 to 255

Example `*ESE 251`
`*ESE? -> 251`

Description
- Specify the value as a sum of the values of each bit in decimal format.
- For example, specifying *ESE 251 will cause the standard enable register to be set to 11111011.
  In this case, bit 2 of the standard event register is disabled. This means that bit 5 (ESB) of the status byte register is not set to 1, even if a query error occurs.
- The default value is *ESE 0 (all bits disabled).
- A query using *ESE? will not clear the contents of the standard event enable register.
- For information about the standard event enable register, see section 12.3.

*ESR?

Function Queries and clears the standard event register.

Syntax `*ESR?`

Example `*ESR? -> 32`

Description
- A sum of the values of each bit is returned in decimal format.
- When an SRQ is sent, you can check what types of events have occurred.
- For example, if a value of 32 is returned, this indicates that the standard event register is set to 00100000.
  This means that the SRQ occurred due to a command syntax error.
- A query using *ESR? will clear the contents of the Standard Event Register.
- For information about the standard event register, see section 12.3.

*IDN?

Function Queries the instrument model.

Syntax `*IDN?`

Example `*IDN?`
`-> YOKOGAWA,LS3300,123456789,1.01`

Description
- This command returns a string in the following format: <Manufacturer>, <Model>, <Serial no.>, <Firmware version>.
- !!!DELETE!!!
  For details on the model, see "Checking the Package Contents."

*OPC

Function Sets bit 0 (the OPC bit) of the standard event register to 1 upon the completion of the specified overlap command.

Syntax `*OPC`

Example `*OPC`

Description The LS3300 does not have overlap commands. The OPC bit is always set to 1.

*OPC?

Function Returns ASCII code 1 if the specified overlap command has finished.

Syntax `*OPC?`

Example `*OPC? -> 1`

Description The LS3300 does not have overlap commands. This command always returns 1.

*OPT?

Function Queries the installed options.

Syntax `*OPT?`

Example `*OPT? -> NONE`

Description
- Because this instrument does not have any options, "NONE" is always returned.
- The *OPT? query must be the last query of a program message.
  An error occurs if there is a query after the *OPT query.

*RST

Function Initializes settings.

Syntax `*RST`

Example `*RST`

Description All settings except communication settings are reset to their factory default values.
For details on initialization, see section 6.3.

*SRE

Function Sets or queries the service request enable register value.

Syntax `*SRE {<NRf>}`
`*SRE?`
<NRf> = 0 to 255

Example *SRE 239
*SRE? -> 175 (because the bit 6, MSS, setting is ignored)

Description
- Specify the value as a sum of the values of each bit in decimal format.
- For example, specifying *SRE 239 will cause the standard enable register to be set to 11101111.
  In this case, bit 4 of the service request enable register is disabled. This means that bit 4 (MAV) of the status byte register is not set to 1, even if the output queue is not empty.
- Bit 6 (MSS) of the status byte register is the MSS bit itself and is therefore ignored.
- The default value is *SRE 0 (all bits disabled).
- A query using *SRE? will not clear the contents of the service request enable register.
- For information about the service request enable register, see section 12.1.

*STB?

Function Queries the Status Byte Register value.

Syntax `*STB?`

Example `*STB? -> 4`

Description
- A sum of the values of each bit is returned as a decimal value.
- Because the register is read without executing serial polling, bit 6 is an MSS bit, not an RQS bit.
- For example, if a value of 4 is returned, this indicates that the status byte register is set to 00000100.
  This means that the error queue is not empty (in other words, an error occurred).
- A query using *STB? will not clear the contents of the status byte register.
- For information about the status byte register, see section 12.2.

*TST?

Function Executes a self-test and queries the result.

Syntax `*TST?`

Example `*TST? -> 0`

Description
- For details on the self-test, see section 15.4.
- This command returns 0 if the self-test is successful and 1 otherwise.
- It takes approximately 3 seconds for the test to complete. When receiving a response from the instrument, set the timeout to a relatively large value.

*WAI

Function Holds the execution of the subsequent command until the completion of the specified overlap command.

Syntax `*WAI`

Example `*WAI`

Description The LS3300 does not have overlap commands. This command will be ignored.

12.1 About Status Reports

Status Reports

The figure below shows the format of status reports that are read by serial polling. This status report format is an extended version of the status report format defined in IEEE 488.2-1992.

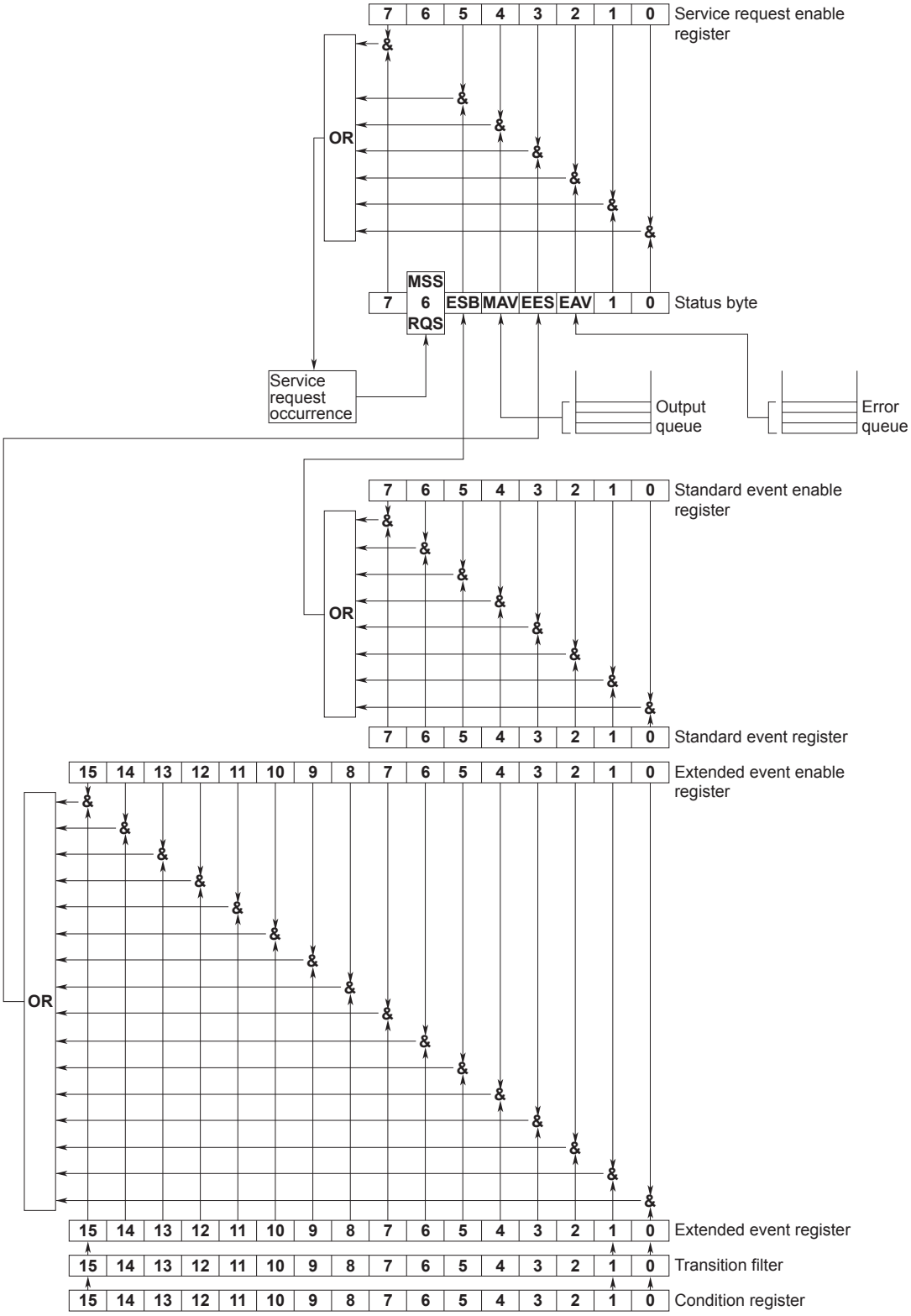

Overview of Registers and Queues

Name	Function	Write	Read
Status byte	–	–	Serial polling (RQS), *STB?(MSS)
Service request enable register	Status byte mask	`*SRE`	`*SRE?`
Standard event register	Indicates device status changes	–	`*ESR?`
Standard event enable register	Standard event register mask	`*ESE`	`*ESE?`
Extended event register	Indicates device status changes	–	`STATus:EESR?`
Extended event enable register	Extended event register mask	`STATus:EESE`	`STATus:EESE?`
Condition register	Current device status	–	`STATus:CONDition?`
Transition filter	Conditions that change the extended event register	`STATus:FILTer<x>`	`STATus:FILTer<x>?`
Output queue	Stores response messages for queries	Query commands	
Error queue	Stores error numbers and messages	–	`STATus:ERRor?`

Registers and Queues That Affect the Status Byte

The following registers affect the status byte bits.

Register	Affected Status Byte Bit
Standard event register	Sets bit 5 (ESB) to 1 or 0
Output queue	Sets bit 4 (MAV) to 1 or 0
Extended event register	Sets bit 3 (EES) to 1 or 0
Error queue	Sets bit 2 (EAV) to 1 or 0

Enable Registers

The following registers are used to mask a bit so that the bit will not affect the status byte even when it is set to 1.

Masked Register	Mask Register
Status byte	Service request enable register
Standard event register	Standard event enable register
Extended event register	Extended event enable register

Reading and Writing to Registers

For example, use the *ESE command to set the standard event enable register bits to 1 and 0. You can use the `*ESE?` command to query whether the standard event enable register bits are ones or zeros. For details on these commands, see chapter 11.

12.2 Status Byte

Status Byte

	RQS						
7	6	ESB	MAV	EES	EAV	1	0
	MSS						

- **Bits 0, 1, and 7**
  Not used (always 0)
- **Bit 2 EAV (Error Available)**
  This bit is 1 when the error queue is not empty. In other words, this bit is set to 1 when an error occurs. See section 12.5.
- **Bit 3 EES (Extend Event Summary Bit)**
  This bit is set to 1 when the logical AND of the extended event register and the extended event enable register is 1. In other words, this bit is set to 1 when a certain event takes place inside the instrument. See section 12.4.
- **Bit 4 MAV (Message Available)**
  This bit is 1 when the output queue is not empty. In other words, this bit is set to 1 when there is data to be transmitted in response to a query. See section 12.5.
- **Bit 5 ESB (Event Summary Bit)**
  This bit is set to 1 when the logical AND of the standard event register and the standard event enable register is 1. In other words, this bit is set to 1 when a certain event takes place inside the instrument. See section 12.3.
- **Bit 6 RQS (Request Service)/MSS (Master Status Summary)**
  This bit is 1 when the logical AND of the status byte excluding bit 6 and the service request enable register is 1. In other words, this bit is set to 1 when the instrument requests service from the controller. RQS is set to 1 when the MSS bit changes from 0 to 1 and is cleared when serial polling is carried out or when the MSS bit changes to 0.

Bit Masking

To mask a bit in the status byte so that it does not cause an SRQ, set the corresponding bit of the service request enable register to 0.
For example, to mask bit 2 (EAV) so that service is not requested when an error occurs, set bit 2 of the service request enable register to 0. Do this using the `*SRE` command. To query whether each bit of the service request enable register is 1 or 0, use `*SRE?`. For details on the `*SRE` command, see chapter 11.

Status Byte Operation

A service request is issued when bit 6 in the status byte becomes 1. Bit 6 is set to 1 when any other bit becomes 1 (when the corresponding bit of the service request enable register is also set to 1). For example, if an event occurs and the logical OR of a standard event register bit and its corresponding enable register bit is 1, then bit 5 (ESB) is set to 1. At this point, if bit 5 of the service request enable register is 1, bit 6 (MSS) is set to 1, and the LS3300 requests service from the controller.
You can check what type of event occurred by reading the contents of the status byte.

Reading the Status Byte

There are two ways to read the contents of the status byte.

- ***STB? Query**
  Bit 6 functions as MSS when a query is made using `*STB?`. This causes the MSS to be read. This query does not cause any of the status byte bits to be cleared after the status byte is read.
- **Serial polling**
  Serial polling causes bit 6 to function as an RQS bit. This causes the RQS to be read. After the status byte is read, only the RQS bit is cleared. You cannot read the MSS bit when serial polling is used.

Clearing the Status Byte

There is no way to clear all the bits in the status byte. The bits that are cleared for each operation are shown below.

- ***STB? Query**
  None of the bits are cleared.
- **Serial Polling**
  Only the RQS bit is cleared.
- **When a *CLS Command Is Received**
  When a `*CLS` command is received, the status byte itself is not cleared, but the contents of the standard event register, which affects the bits in the status byte, are cleared. As a result, the corresponding status byte bits are cleared. Because the output queue is not cleared with a `*CLS` command, bit 4 (MAV) in the status byte is not affected. However, the output queue will be cleared if the *CLS command is received just after a program message terminator.

12.3 Standard Event Register

Standard Event Register

7	6	5	4	3	2	1	0
PON	URQ	CME	EXE	DDE	QYE	RQC	OPC

- **Bit 7 PON (Power ON)**
  This bit is set to 1 when the instrument is turned on.
- **Bit 6 URQ (User Request)**
  Not used (always 0)
- **Bit 5 CME (Command Error)**
  This bit is set to 1 when there is a command syntax error.
  Example Command names are misspelled, or character data that is not one of the available options has been received.
- **Bit 4 EXE (Execution Error)**
  This bit is set to 1 when the command syntax is correct, but the command cannot be executed in the current state.
  Example A command whose parameter is outside the allowable range was received.
- **Bit 3 DDE (Device Error)**
  This bit is set to 1 when a command cannot be executed for internal reasons other than a command syntax error or command execution error.
- **Bit 2 QYE (Query Error)**
  This bit is set to 1 when a query command is received, but the output queue is empty or the data is lost.
  Example There is no response data, or data is lost due to an overflow in the output queue.
- **Bit 1 RQC (Request Control)**
  Not used (always 0)
- **Bit 0 OPC (Operation Complete)**
  This bit is set to 1 upon the completion of the operation designated by the `*OPC` command (see chapter 11 for details).

Bit Masking

To mask a certain bit of the standard event register so that it does not cause bit 5 (ESB) in the status byte to change, set the corresponding bit of the standard event enable register to 0.
For example, to mask bit 2 (QYE) so that ESB will not be set to 1 even if a query error occurs, set bit 2 of the standard event enable register to 0. Do this using the `*ESE` command. To query whether each bit of the standard event enable register is 1 or 0, use `*ESE?`.
For details on the `*ESE` command, see chapter 11.

Standard Event Register Operation

The standard event register indicates eight types of events that occur inside the instrument. When one of the bits in this register becomes 1 (and the corresponding bit of the standard event enable register is also 1), bit 5 (ESB) in the status byte is set to 1.
Example
1. A query error occurs.
2. Bit 2 (QYE) is set to 1.
3. When bit 2 of the standard event enable register is 1, bit 5 (ESB) in the status byte is set to 1.

You can also check what type of event occurred in the LS3300 by reading the contents of the standard event register.

Reading the Standard Event Register

You can use the `*ESR?` command to read the contents of the standard event register. The register is cleared after it is read.

Clearing the Standard Event Register

The standard event register is cleared in the following three cases.
- When the contents of the standard event register are read using the `*ESR` command.
- When a `*CLS` command is received.
- When the LS3300 is restarted.

12.4 Extended Event Register

The extended event register receives information about changes in the condition register, which indicates the instrument's internal condition. The information is the result of edge detection performed by the transition filter.

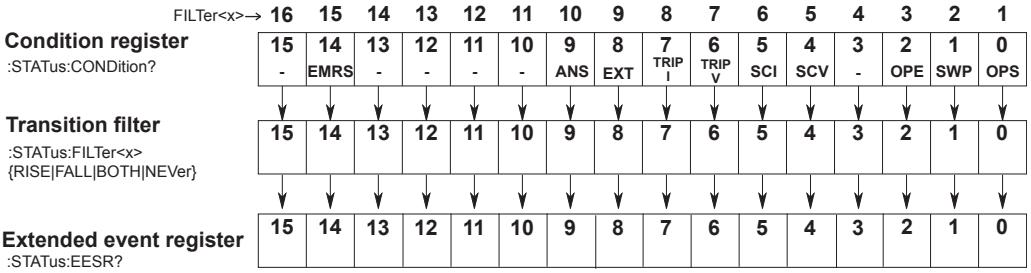

The condition register bits are described below.

Bit 0	OPS (Output State)	Set to 1 while the output is on
Bit 1	SWP (Sweep)	Set to 1 while sweeping and 0 while held
Bit 2	OPE (Output Enabled)	Set to 1 when the output can be turned on, 0 otherwise
Bit 3	-	Always zero
Bit 4	SCV (Source Changed (V))[1]	Set to 1 while the output signal of the voltage output is in transition
Bit 5	SCI (Source Changed(I))[1]	Set to 1 while the output signal of the current output is in transition
Bit 6	TRIP V (Tripped (V))[1]	Set to 1 when tripping is detected in the voltage output
Bit 7	TRIP I (Tripped (I))[1]	Set to 1 when tripping is detected in the current output
Bit 8	EXT (External Input Signal Error)	Set to 1 when an external reference signal error is detected
Bit 9	ANS (Abnormal Structure)	Set to 1 while there is an error in the device configuration
Bit 10	-	Reserved
Bit 11	-	Reserved
Bit 12	-	Always zero
Bit 13	-	Always zero
Bit 14	EMRS(Emergency Status)[1]	Set to 1 while there is a device error
Bit 15	-	Reserved

1 The OR of the synchronized devices during synchronous operation. The master device queries the output transition, device error, and trip statuses from the condition registers of the slave devices, takes the OR with its own output transition, device error, and trip statuses, and reflects them in its own condition register.

The transition filter parameters detect changes in the specified condition register bits (numeric suffixes 1 to 16) and overwrite the extended event register in the following ways.

RISE	The specified extended event register bit is set to 0 when the corresponding condition register bit changes from 0 to 1.
FALL	The specified extended event register bit is set to 1 when the corresponding condition register bit changes from 1 to 0.
BOTH	The specified extended event register bit is set to 1 when the corresponding condition register bit changes from 0 to 1 or from 1 to 0.
NEVer	Always zero.

12.5 Output and Error Queues

Output queue

The output queue stores query response messages. For example, if you send an `*IDN?` command, which queries the instrument model, the response message is stored in the output queue until it is read.

As shown below, error messages are stored in order and read from the oldest message first. The output queue is cleared in the following cases.

- When a new message is received from the controller.
- When a deadlock occurs (see section 12.1).
- When a device clear command (DCL or SDC) is received.
- When the LS3300 is restarted.

The `*CLS` command does not clear the output queue. You can determine whether or not the output queue is empty by checking bit 4 (MAV) in the status byte.

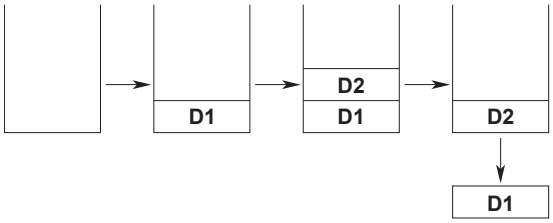

Error Queue

When an error occurs, the error queue stores the error number and message. For example, if the instrument receives an incorrect program message from the controller, the error number (113) and the error message (“Undefined header”) are stored in the error queue when the instrument displays the error message.

You can use the `:STATus:ERRor?` query to read the contents of the error queue. Like the output queue, the messages in the error queue are read from the oldest one first.

If the error queue overflows, the last message is replaced with the following message: 350, “Queue overflow.”

The error queue is cleared in the following cases.

- When a `*CLS` command is received.
- When the LS3300 is restarted.

You can determine whether or not the error queue is empty by checking bit 2 (EAV) in the status byte.

13.1 Troubleshooting

Faults and Corrective Actions

If an error code appears on the display, see section 13.2.

- If servicing is necessary, or if the instrument does not operate properly even after you have attempted to deal with the problem according to the instructions in this section, contact your nearest YOKOGAWA dealer.

Problems and Solutions		Refer to Section
Nothing appears on the screen when the power is turned on.		
	Securely connect the power cord to the instrument and to the power outlet.	3.3
	Set the supply voltage and frequency to within the permitted range.	3.3
The output does not turn on.		
	Confirm that the ambient temperature and humidity are within their specified ranges.	3.2
	Check that the inlet and outlet holes are not blocked.	3.2
	Check the cable wiring.	3.6, 5.3
	Turn the power off and then on again.	3.4
The panel keys do not work.		
	Check the REMOTE indicator. If the REMOTE indicator is on, press UTILITY to turn off the indicator.	1.1, 1.2
The external oscillator frequency cannot be monitored.		
	Check the signal connection.	7.1
	Check that the frequency setting is EXT(frequency monitor).	5.2
Unable to configure or control the instrument through the communication interface.		
	Check to make sure that the GP-IB address setting matches the specifications.	11.3
	Check to make sure that the TCP/IP settings match the specifications.	10.3
	Confirm that the interface meets the electrical and mechanical specifications.	10.1, 11.1
UNIT LEDs are blinking in red.		
	If the UNIT1 LED is blinking, check the external reference signal connection. If the UNIT2 or UNIT3 LED is blinking, check the sync signal connections and USB connections.	5.1, 5.3

13.2 Error Code Descriptions and Corrective Actions

This section explains error codes that may appear on the front panel.

Error Codes

If any of the following error codes appears, the instrument will beep intermittently. Immediately turn off the power. Servicing is required.

Code	Description
E.901	A cooling fan error was detected.
E.902, E.903	An internal temperature error was detected.
E.904, E.908	An internal circuit error was detected.
E.961	USB overcurrent was detected.

Error Codes That Appear at Power-on or during the Self-test

If any of the following error codes appears, servicing is required. If the error appears at power-on, the instrument beeps.

Code	Description
E.911 to E.914	An internal circuit error was detected.
E.915	A cooling fan error was detected.
E.921 to E.934	An internal circuit error was detected.
E.942	An error was detected in the 1 V range.
E.943	An error was detected in the 10 V range.
E.944	An error was detected in the 30 V range.
E.945	An error was detected in the 100 V range.
E.946	An error was detected in the 300 V range.
E.947	An error was detected in the 1000 V range.
E.948	An error was detected in the 30 mA range.
E.949	An error was detected in the 100 mA range.
E.950	An error was detected in the 1 A range.
E.951	An error was detected in the 10 A range.
E.952	An error was detected in the 50 A range
E.953	An error was detected in the AUX 500 mV range
E.954	An error was detected in the AUX 5 V range

Warning Codes

Code	Description	Corrective Action	Refer to Section
E.030, E.031	Amplitude control error has been detected.	Check the external signal input terminal connection. Check the wiring of the voltage or current terminals. Check the load connected to the voltage or current terminals.	2.2 3.5 3.6 5.1
E.032	Voltage amplifier oscillation error has been detected.	Check the external signal input terminal connection. Check the wiring of the voltage terminals. Check the load connected to the voltage terminals.	2.2 3.5 3.6 5.1
E.033	Current amplifier oscillation error has been detected.	Check the external signal input terminal connection. Check the wiring of the current terminals. Check the load connected to the current terminals.	2.2 3.5 3.6 5.1
E.034	An overvoltage load was detected.	Check the wiring of the current terminals. Check the load connected to the current terminals.	2.2 3.5 3.6
E.035	An overcurrent load was detected.	Check the wiring of the voltage terminals. Check the load connected to the voltage terminals.	2.2 3.5 3.6
E.036	An error was detected in the amplitude or frequency of the external input signal (reference signal).	Check the external input level.	7.1

Code	Description	Corrective Action	Refer to Section
E051	Sweeping cannot be started because another function is sweeping.	Check the sweep status of the other function.	4.7
E053	Sweeping cannot be started because the output is not turned on.	Check the output status.	4.6
E054	The output cannot be controlled because this unit is being controlled by a host unit.	Check the wiring system.	5.1 5.3
E058	Device configuration is not correct.	Check the device connections.	5.3
E059	Device connection or disconnection was detected.	Check the device connections.	5.3
E060	Can only be executed when the wiring system is 1P2W.	Check the wiring system.	5.2
E061	An error was detected in the amplitude or frequency of the external input signal (reference signal).	Check the external input signal.	5.1

13.3 Communication Error Messages

This section explains communication error messages.

- Error messages that are read from a PC such as through the :STATus:ERRor? command are output in English.
- If servicing is necessary to solve the problem indicated by a message, contact your nearest YOKOGAWA dealer.
- The error messages described here are only those that you can read with the :STATus:ERRor? command from a PC or the like. For other messages, which are displayed on the front panel, see section 13.2.

Communication Syntax Errors (100 to 199)

Code	Message	Corrective Action	Page
102	Syntax error.	A syntax error not covered by error codes 100 to 199.	Chapter 10, chapter 11
103	Invalid separator.	Separate data values with a comma.	10-1
104	Data type error.	Use a correct data type.	10-6 and 10-7
108	Parameter not allowed.	Check the number of data values.	10-6 and chapter 11
109	Missing parameter.	Be sure to include all necessary data values.	10-6 and chapter 11
111	Header separator error.	Use a comma to separate each header from its data.	10-1
112	Program mnemonic too long.	Check the command length.	Chapter 11
113	Undefined header.	Check the header.	Chapter 11
114	Header suffix out of range.	Check the header.	Chapter 11
120	Numeric data error.	A value must be specified where the syntax contains <NRf>.	10-6
123	Exponent too large.	Where the syntax contains <NR3>, make the exponent that follows E smaller.	10-6 and chapter 11
124	Too many digits.	Limit numeric values to 255 digits or less.	10-6 and chapter 11
128	Numeric data not allowed.	Use a data type other than <NRf>.	10-6 and chapter 11
131	Invalid suffix.	Check the unit of <Voltage>, <Current>, <Time>, <Frequency>, or <Phase>	10-6
134	Suffix too long.	Check the unit of <Voltage>, <Current>, <Time>, <Frequency>, or <Phase>	10-6
138	Suffix not allowed.	Only the following units can be used: <Voltage>, <Current>, <Time>, <Frequency>, <Phase>.	10-6
141	Invalid character data.	Be sure to select one of the listed choices when the syntax contains {...|...|...}.	Chapter 10, Chapter 11
144	Character data too long.	Check the spelling of the strings when the syntax contains {...|...|...}.	Chapter 11
148	Character data not allowed.	Use a data type other than {...|...|...}.	Chapter 11
150	String data error.	Enclose parameters with single or double quotation marks where the syntax contains <String>.	10-7
151	Invalid string data.	The <String> is either too long, or it contains an unusable character.	Chapter 11
158	String data not allowed.	Use a data type other than <String>.	Chapter 11
161	Invalid block data.	<Block data> cannot be used.	10-7 and chapter 11
168	Block data not allowed.	<Block data> cannot be used.	5-7 and Chapter 6
171	Missing Right	Mathematical operations cannot be used.	—
172	Invalid expression.	Mathematical operations cannot be used.	Chapter 11
178	Expression data not allowed.	Mathematical operations cannot be used.	Chapter 11
181	Invalid outside macro definition.	The LS3300 does not support the IEEE 488.2 macro specifications.	—

Communication Execution Errors (200 to 299)

Code	Message	Corrective Action	Page
203	Command protected	See “Adjustment and Calibration” in section 13.8.	13-12
221	Setting conflict.	Check settings that are related to each other.	Chapter 11
222	Data out of range.	Check the ranges of the settings.	Chapter 11
223	Too much data.	Check data byte lengths.	Chapter 11
224	Illegal parameter value.	Check the ranges of the settings.	Chapter 11
225	OverFlow.	Keep program messages to 1024 bytes or less in length, including <PMT>.	10-2
226	Out Of Memory.	Keep program messages to 1024 bytes or less in length, including <PMT>.	10-2
241	Hardware missing.	Check that the specified options are all installed.	—
260	Expression error.	Mathematical operations cannot be used.	—
270	Macro error.	The LS3300 does not support the IEEE 488.2 macro specifications.	—
272	Macro execution error.	The LS3300 does not support the IEEE 488.2 macro specifications.	—
273	Illegal macro label.	The LS3300 does not support the IEEE 488.2 macro specifications.	—
275	Macro definition too long.	The LS3300 does not support the IEEE 488.2 macro specifications.	—
276	Macro recursion error.	The LS3300 does not support the IEEE 488.2 macro specifications.	—
277	Macro redefinition not allowed.	The LS3300 does not support the IEEE 488.2 macro specifications.	—
278	Macro header not found.	The LS3300 does not support the IEEE 488.2 macro specifications.	—

Communication Query Errors (400 to 499)

Code	Message	Corrective Action	Page
410	Query INTERRUPTED.	Check the transmission and reception order.	10-2
420	Query UNTERMINATED.	Check the transmission and reception order.	10-2
430	Query DEADLOCKED.	Keep program messages to 1024 bytes or less in length, including <PMT>.	10-2
440	Query UNTERMINATED after indefinite response.	Do not write a query after *IDN? or *OPT?.	—

System Communication Errors (300 and 399)

Code	Message	Corrective Action	Page
300	Communication device-specific error.	Servicing is required.	—
399	Fatal error in the communication driver.	Servicing is required.	—

Communication Warnings (50)

Code	Message	Corrective Action	Page
50	*OPC/? exists in message.	Write *OPC or *OPC? at the end of program messages.	—

Other Errors (350)

Code	Message	Corrective Action	Page
350	Queue overflow.	Read the error queue.	10-6

Note

Code 350 occurs when the error queue overflows.

Information (1 to 99)

Code	Message	Corrective Action	Page
51	Sweeping cannot be started because another function is sweeping.	Check the sweep status of the other function.	5-12, 6-9
53	Sweeping cannot be started because the output is not on.	Turn the output on.	5-8, 6-6
54	The output cannot be controlled because this unit is being controlled by a host unit.	Check the wiring system and wiring.	Chapter 5
58	Device configuration is not correct.	Check the wiring.	Chapter 5
59	Device connection or disconnection was detected.	Check the wiring system and wiring.	Chapter 5
60	Can only be executed when the wiring system is 1P2W.	Check the wiring system.	Chapter 5
61	An error was detected in the amplitude or frequency of the external input signal (reference signal).	Check the external reference signal.	Chapter 5

Execution Errors (800 to 899)

Code	Message	Corrective Action	Page
802	Invalid command.	CAL on the UTILITY menu cannot be executed during adjustment mode.	4-2

System Errors (900/999)

Code	Message	Corrective Action	Page
911 to 950	CPU board error.	For details about the message and corrective action, see section 13.2.	15-2

13.4 Instrument Error Detection and Clearance

Trip Detection

When voltage or current is being generated, if a load that would cause the output range to be exceeded is connected, the instrument will detect the abnormal load and automatically turn off (trip) the output. The V1, V2, V3 keys or I1, I2 and I3 keys whose output is off blink. If tripping occurs, the display shows an error code. Connect a load that is within the output range. For more details on error codes, see “Warning Codes” in section 13.2.

Clearing the Error Display

Press OUTPUT. The OUTPUT key light turns off. If synchronous operation is being performed, press OUTPUT on the master device.
Press OUTPUT again. The OUTPUT key light turns on, and the output turns on.

High Voltage Notification

If you set the voltage output to 150 V or higher, beeps will be generated. If 150 V or higher is being output, a beep is generated intermittently.
If you set the voltage range to 300 V or higher, the HIGH VOLTAGE indicator will illuminate.
This feature is to warn you of the risk of electric shock due to high voltage.
It is not a malfunction.

Clearing of the Notification

Beeping stops when the voltage output falls below 150 V.
The HIGH VOLTAGE indicator turns off when you set the voltage range below 300 V.

13.5 Self-Test

Procedure

1. On the top menu, press the **UTILITY** soft key or the **UTILITY** key.
2. Press the **Maintenance** soft key.

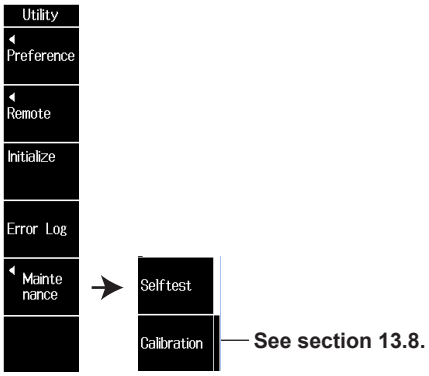

3. Press the **Selftest** soft key. The self-test starts.
4. Press the **Exec** soft key to start the self-test.

   Press the **OK** soft key to return to the previous screen.

Explanation

The following items are tested.

- Cooling fan
- Voltage and current ranges
- Internal circuit

A self-test is also performed automatically when the power is turned on.

You can also execute a self-test with a communication command.

13.6 Cleaning the Filter

CAUTION

If the filter attached to the Inlet holes is dirty, the air intake may be obstructed causing the instrument to heat up and break down.

French

ATTENTION

Si le filtre raccordé aux orifices d'entrée est poussiéreux, l'admission d'air risque de s'obstruer, ce qui risque d'entraîner une surchauffe de l'équipement et sa panne.

There is a filter attached to the Inlet holes on the rear panel of the LS3300.
Check the filter periodically to see that it is not clogged.

Removing the Filter

1. Turn off the LS3300.
2. Pull the lock buttons at the left and right edges of the filter cover toward you.
   Pull them until you hear a click. This will release the lock.

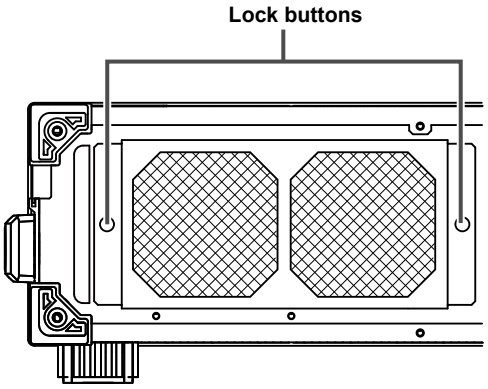

3. Pull the filter cover toward you.
   The filter cover will come off.
4. Remove the filter from the filter cover.

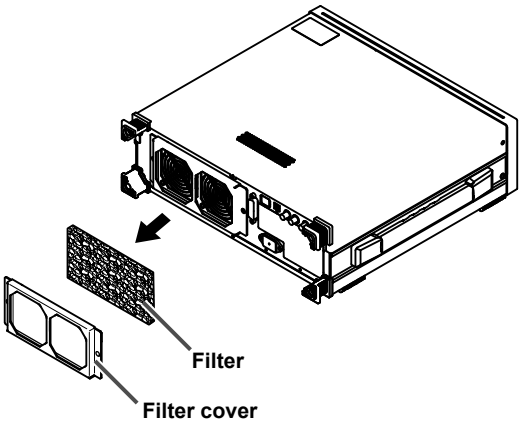

Attaching the Filter

1. Attach the filter to the filter cover.
   There is no front or back distinction.
2. Insert the filter cover lock buttons into the filter cover attachment holes on the rear panel.
   Make sure that the locks are released.
3. Push the lock buttons.
   Push them until you hear a click.

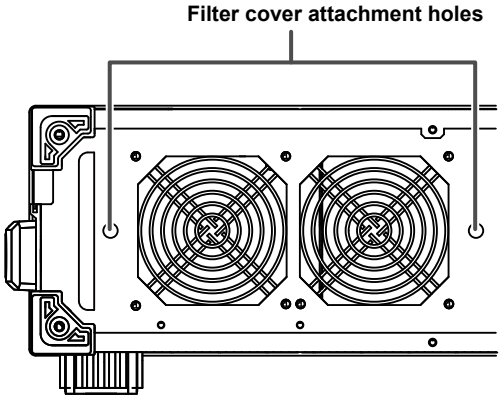

Cleaning the Filter

Clean the filter with neutral agent.
Clean the filter with neutral detergent. Drain off excess water.
To do so do not wring the filter; swing it up and down.
After cleaning, let the filter dry naturally.

Note

If the filter is clogged, the temperature inside the LS3300 will increase and will affect the operation and performance.
Check the filter once every three months. How fast the filter gets dirty depends on the environment.
If the filter is extremely dirty and cannot be cleaned completely, you need to replace the filter. Contact your nearest YOKOGAWA dealer.

13.7 Recommended Part Replacement

The replacement period varies depending on the conditions of use. Replace the parts by using the following table as a guideline. Contact your nearest YOKOGAWA dealer to have parts replaced.

Note

Standard and optional accessories are not covered by warranty.

Part Name	Recommended Replacement Interval
Cooling fan	3 years
Filter	1 year
LCD	Approx. 40000 hours

13.8 Adjustment and Calibration

Adjustment

Contact your nearest YOKOGAWA dealer to have your LS3300 adjusted.
It is possible for the customer to make simple adjustments on the LS3300. Have a qualified engineer adjust the LS3300 at a facility with sufficient precision. A manual explaining the simple adjustment procedure of the LS3300 is available for downloading from the following webpage. To download the information, you need to register.
http://www.yokogawa.com/jp-ymi/tm/Bu/LS3300/

Calibration

We recommend that you calibrate the LS3300 once a year to check its accuracy. Contact your nearest YOKOGAWA dealer to have your LS3300 calibrated.

13.9 Disposing of the Instrument

When disposing of the instrument, follow the laws and ordinances of your country or region.

14.1 Output Range

Output Range

AC Voltage

Range	Output Range[1]	Resolution	Maximum Output[2]	Output Resistance[3]
1 V	0 to 1.25000 V	10 µV	0.5 A or more	6 mΩ or less
10 V	0 to 12.5000 V	100 µV	Approx. 600 mA	6 mΩ or less
30 V	0 to 37.5000 V	100 µV	Approx. 60 mA	6 mΩ or less
100 V	0 to 125.000 V	1 mV	Approx. 60 mA	6 mΩ or less
300 V	0 to 375.000 V	1 mV	Approx. 20 mA	6 mΩ or less
1000 V	0 to 1250.00 V	10 mV	Approx. 6 mA	6 mΩ or less

AC Current

Range	Output Range[1]	Resolution	Maximum Output[2]
30 mA	0 to 37.5000 mA	0.1 µA	Approx. 15 V
100 mA	0 to 125.000 mA	1 µA	Approx. 15 V
1 A	0 to 1.25000 A	10 µA	Approx. 15 V
10 A	0 to 12.5000 A	100 µA	Approx. 3 V
50 A	0 to 62.500 A	1 mA	Approx. 0.6 V

AUX

Range	Output Range[1]	Resolution	Maximum Output[2]	Output Resistance
500 mV	0 to 625.00 mV	10 µV	Approx. 0.1 mA	1 Ω or less
5 V	0 to 6.2500 V	100 µV	Approx. 5 mA	1 Ω or less

1 The output level can be set up to 120% of the range.
For outputs exceeding 120%, the ratio must be set to 100% or higher.

2 At 1% to 120% of range.
At frequencies exceeding 1 kHz, specifications may not be met.

3 When 758933, 758917, or B8506ZK is in use; excluding aging and the effects of measurement leads

14.2 Accuracy

Conditions:

Frequency:	Using the internal oscillator
Load:	Pure resistance
Temperature, humidity:	23°C ± 3°C, 20% RH to 80% RH When the temperature is in the range of 5°C to 20°C or 26°C to 40°C, add the temperature coefficient.
Output terminals:	LO terminal grounding
Measurement bandwidth:	Up to 50 kHz

Item **Specifications**

AC Voltage

Output range: 10% to 125% of range

Range	Output Display Resolution	Accuracy (1 year), ±(% of Setting + % of Range)[1]		
		50Hz/60 Hz	40 Hz ≤ f ≤ 400 Hz[2]	400 Hz < f ≤ 1.2 kHz
1 V	10 μV	0.03 + 0.005	0.05 + 0.01	0.10 + 0.02
10 V	100 μV			
30 V	100 μV			
100 V	1 mV			
300 V	1 mV			
1000 V	10 mV			

Output range: 1% to 10% of range

Range	Output Display Resolution	Accuracy (1 year), ±(% of Range)[1]		
		50Hz/60 Hz	40 Hz ≤ f ≤ 400 Hz[2]	400 Hz < f ≤ 1.2 kHz
1 V	10 μV	0.008	0.015	0.03
10 V	100 μV			
30 V	100 μV			
100 V	1 mV			
300 V	1 mV			
1000 V	10 mV			

1 Excludes voltage drop due to the output resistance
2 Includes the accuracy specification when LINE synchronization is set. However, no fluctuation in the LINE frequency or duty ratio is assumed.

AC Current

Output range: 10% to 125% of range

Range	Display Resolution	Accuracy (1 year), ±(% of Setting + % of Range)		
		50 Hz/60 Hz	40 Hz ≤ f ≤ 400 Hz[1]	400 Hz < f ≤ 1.2 kHz
30 mA	0.1 μA	0.04 + 0.005	0.06 + 0.01	0.12 + 0.02
100 mA	1 μA			
1 A	10 μA			
10 A	100 μA			
50 A	1 mA			

Output range: 1% to 10% of range

Range	Display Resolution	Accuracy (1 year), ±(% of Range)		
		50 Hz/60 Hz	40 Hz ≤ f ≤ 400 Hz[1]	400 Hz < f ≤ 1.2 kHz
30 mA	0.1 μA	0.009	0.016	0.032
100 mA	1 μA			
1 A	10 μA			
10 A	100 μA			
50 A	1 mA			

1 Includes the accuracy specification when LINE synchronization is set. However, no fluctuation in the LINE frequency or duty ratio is assumed.

Item	Specifications

AUX

Output range: 10% to 125% of range

Range	Output Display Resolution	Accuracy (1 year), ±(% of Setting + % of Range)[1]		
		50Hz/60 Hz	40 Hz ≤ f ≤ 400 Hz[2]	400 Hz < f ≤ 1.2 kHz
500 mV	10 µV	0.04 + 0.01	0.06 + 0.01	0.12 + 0.02
5 V	100 µV			

Output range: 1% to 10% of range

Range	Output Display Resolution	Accuracy (1 year), ±(% of Setting + % of Range)[1]		
		50Hz/60 Hz	40 Hz ≤ f ≤ 400 Hz[2]	400 Hz < f ≤ 1.2 kHz
500 mV	10 µV	0.014	0.016	0.032
5 V	100 µV			

1 Excludes voltage drop due to the output resistance
2 Includes the accuracy specification when LINE synchronization is set. However, no fluctuation in the LINE frequency or duty ratio is assumed.

Phase (between the voltage and current outputs when used alone or between the voltage outputs of the master and slave devices when linked)

Current output (I1) corresponding to voltage (V1) or between the voltage outputs of the master and slave devices when linked
Output range: 10% to 125% of range

Accuracy (1 year), (ΔΦ)		
50 Hz/60 Hz	40 Hz ≤ f ≤ 400 Hz[1]	400 Hz < f ≤ 1.2 kHz
±0.030°	±0.100°	±0.400°

AUX output (I1) corresponding to voltage (V1)
Output range: 10% to 125% of range

Accuracy (1 year), (ΔΦ)		
50 Hz/60 Hz	40 Hz ≤ f ≤ 400 Hz[1]	400 Hz < f ≤ 1.2 kHz
±0.050°	±0.100°	±0.400°

Slave voltage (V2) corresponding to master voltage (V1)
Output range: 10% to 125% of range

Accuracy (1 year), (ΔΦ)		
50 Hz/60 Hz	40 Hz ≤ f ≤ 400 Hz[1]	400 Hz < f ≤ 1.2 kHz
±0.030°	±0.100°	±0.400°

1 Includes the accuracy specification when LINE synchronization is set. However, no fluctuation in the LINE frequency or duty ratio is assumed.

Active Power

Output range: 10% to 125% of range

Accuracy (1 year)		
±{(% of VA) x PF + % of Range + PWRerror(% of VA)}[1,2,3]		
50 Hz/60 Hz	40 Hz ≤ f ≤ 400 Hz[4]	400 Hz < f ≤ 1.2 kHz
0.040 + 0.005 + PWRerror	0.060 + 0.010 + PWRerror	0.120 + 0.020 + PWRerror

Output range: 1% to 10% of range

Accuracy (1 year)		
±{% of Range + PWRerror(% of VA)}[1,2,3]		
50 Hz/60 Hz	40 Hz ≤ f ≤ 400 Hz[4]	400 Hz < f ≤ 1.2 kHz
0.009 + PWRerror	0.016 + PWRerror	0.032 + PWRerror

1 For phase setting Φ, power factor PF = cosΦ
Equation for calculating the value to add to the active power accuracy for the phase error (ΔΦ)
PWRerror(%) = 100 x {cosΦ - cos(Φ + ΔΦ)}
Example: For 60 Hz, phase Φ = 60°, ΔΦ = +0.03°
PWRerror(%) = 100 x {cos(60) – cos(60.03)} = 0.0453%
2 Add 0.005% of range for AUX output.
3 The output range that the power accuracy applies to is for when the voltage and current (including AUX) are at least 1% of the range.
4 Includes the accuracy specification when LINE synchronization is set. However, no fluctuation in the LINE frequency or duty ratio is assumed.

Item	Specifications
Reactive Power	

Output range: 10% to 125% of range

Accuracy (1 year)		
±{(% of VA) x PF + % of Range + VARerror(% of VA)}[1,2,3]		
50 Hz/60 Hz	**40 Hz ≤ f ≤ 400 Hz[4]**	**400 Hz < f ≤ 1.2 kHz**
0.040 + 0.005 + VARerror	0.060 + 0.010 + VARerror	0.120 + 0.020 + VARerror

Output range: 1% to 10% of range

Accuracy (1 year)		
±{% of Range + VARerror(% of VA)}[1,2,3]		
50 Hz/60 Hz	**40 Hz ≤ f ≤ 400 Hz[4]**	**400 Hz < f ≤ 1.2 kHz**
0.009 + VARerror	0.016 + VARerror	0.032 + VARerror

1 For phase setting Φ, power factor PF = sinΦ
Equation for calculating the value to add to the reactive power accuracy for the phase error (ΔΦ)
BARerror(%) = 100 x {sinΦ - sin(Φ + ΔΦ)}
Example: For 60 Hz, phase Φ = 60°, ΔΦ = +0.03°
BARerror(%) = 100 x {sin(60) – sin(60.03)} = -0.0262%

2 Add 0.005% of range for AUX output.

3 The output range that the power accuracy applies to is for when the voltage and current (including AUX) are at least 1% of the range.

4 Includes the accuracy specification when LINE synchronization is set. However, no fluctuation in the LINE frequency or duty ratio is assumed.

Frequency

Accuracy(1year): ±100 ppm

14.3 Stability

Conditions:

Output range:	1% to 125% of range
Output state:	The same output state is retained (no load fluctuation).
Frequency:	Using the internal oscillator. Add 50 ppm of range for 1 kHz to 1.2 kHz.
Output terminals:	LO terminal grounding
Temperature, humidity:	23°C ± 3°C, 20% RH to 80% RH, no fluctuation
Other conditions:	No fluctuation (such as wind)
Time:	From 1 minute to 1 hour after the output is turned on

	±(ppm of Setting + ppm of Range)
Voltage	20 + 30
Current	20 + 30
Power(PF = 1)	40 + 60

14.4 Temperature coefficient

Item	Specifications	
Voltage output Current output AUX output	50/60 Hz:	±30 ppm/°C of setting, at 5°C to 20°C and 26°C to 40°C
	Other frequencies 40 Hz to 1 kHz:	±50 ppm/°C of setting, at 5°C to 20°C and 26°C to 40°C
Phase	50/60 Hz:	±0.001°/°C, at 5°C to 20°C and 26°C to 40°C
	Other frequencies 40 Hz to 1 kHz:	±0.002°/°C, at 5°C to 20°C and 26°C to 40°C

Includes the accuracy specification when LINE synchronization is set.

14.5 Response Time

Item	Specifications
Voltage, current, AUX output	Approx. 2 s, at 0 -> 100% of the setting (until the output converges to 0.02% of the last value)

When the setting is changed by more than 1% of range, “STABILIZING” is displayed on the screen until the output converges to 0.02% (of range) of the last value.
The output may not keep up with short-term load fluctuations, and amplitude fluctuations may occur as a result. If this occurs, “STABILIZING” may not be displayed.
If current output is repeatedly turned on and off and the time during which the output is off is short, the internal circuit current does not attenuate completely and remains as a DC offset. If the output is turned on again in this state, it may take some time to control the internal circuit, and “STABILIZING” may be displayed for 2 seconds or more.
If this state is repeated, a control error may occur, and the output may trip (E. 031).
If this happens, make the time during which the current output is off longer.

14.6 Distortion Rate

Conditions:	Frequency range:	40 Hz to 1.2 kHz
	Road:	Pure resistance The load current during voltage generation and the load voltage during current generation are less than or equal to 20% of the maximum output.
	Output range:	40% to 125% of range

Item	Specifications
Voltage output	0.07% or smaller
Current output	0.10% or smaller
AUX output	0.18% or smaller

14.7 Settings and Display Items

Setting

Item		Setting Value	Resolution
Voltage	Range	1 V, 10 V, 30 V, 100 V, 300 V, 1000 V	Refer to "Output Range"
	Level	0 to 120% (of range)	
	Level Ratio	0 to 120% (of setting)[1]	0.001%
	Phase	-180° to +359.999	0.001°
Current	Range	30mA, 100 mA, 1 A, 10 A, 50 A, 100 A, 150 A [2] AUX Output 500 mV, 5 V	Refer to "Output Range" Valid when 1P2W (HI current) is selected
	Level	0 to 120% (of range)	
	Level Ratio	0 to 120% (of setting)	0.001%
	Phase	-180° to +359.999	0.001°
Power Factor		LEAD/LAG -1 to 0 to +1	0.0001
Frequency		40Hz to 1.2kHz	0.001 Hz
Wiring [2]	Phase Number	1P2W, 1P2W(HiCurrent), 1P3W, 3P3W, 3P3W(3V3A), 3P4W	
Oscilation	INTernal	40Hz to 1.2kHz	0.001 Hz
	EXTernal	Input from the external transmitter (I/Q)	Refer to "External Input and Output"
	LINE	50 Hz/60 Hz	
Sweep	Time	8s, 16s, 32s, 64s	
	Range[3]	0-100%, 0-105%, 0-110%, 0-120%	
Conversion Ratio of the Current Sensor[4]		0.0001mV/A to 99999.9999mV/A	0.0001mV/A
Ground / Ungrounded[5]		Voltage and current (including AUX) can be switched separately.	

1 The output value is determined by “level x level ratio,” but the maximum output is 125% of range.
2 When synchronous operation is in use and the master wiring is not 1P2W, all the items above are set on the master side.
The 100 A range that becomes available using 1P2W (HI current) can be output with two units, the accuracy specification twice that of the 50 A range, the 150 A range can be output with three units, the accuracy specification three times that of the 50 A range.
3 The sweep range (%) indicates the level ratio range.
4 Default value; 1000 mV/A
5 When the Lo terminal is grounded, voltage cannot be applied between Lo and ground.

Display[1]

Item		Display
Voltage(Vout)	Output level	Level setting × Level ratio setting
Current(Iout)	Output level	Level setting × Level ratio setting
Phase[2]		Displays the output phase setting relative to the reference signal
Power Factor(PF)[3]		Displays the power factor equivalent to the current phase relative to the voltage
Active Power(W)[4]		Displays the power calculated from active power (W) Vout × Iout × cosΦ or Vout × Iout × PF.
Reactive Power(var)	INTernal[4]	Vout × Iout × sinΦ

1 All output displays show values derived from the above equations.
2 If the wiring is 1P2W, the voltage and current phases can be set separately.
For other wiring systems, set the current phase relative to the voltage.
The phase is positive when the current leads the voltage.
Errors may occur in the phase difference (PF=0.866 <->Phase=30) depending on the power factor setting.
3 LEAD indicates that the current phase is leading the voltage. LAG indicates that the current phase is lagging the voltage.
4 If output from the AUX terminal, calculate the power based on the current calculated from the conversion ratio of the current sensor.

14.8 Functions

Item	Specifications
Output control	OUTPUT: Turns on the output of functions set to SELECT ON * In synchronous operation when the wiring system is not 1P2W, the master device controls the output of the slave device. SELECT: Allows output control using the OUTPUT key * In link operation when the wiring system is not 1P2W, all devices are controlled using the OUTPUT/SELECT key on the master device. Output cannot be controlled on slave devices.
Sweep function	Target: Voltage, AUX, and current level ratios Sweep range: 0 to the specified upper limit. For the upper limit, select 100, 105, 110, or 120% of the setting. Speed: For sweeping from 0 to 100% or from 100% to 0 of the setting; select from approx. 8 s, 16 s, 32 s, 64 s. The last value of the sweep does not exceed 125% of the range.
Protection function	Trip detection Excessive voltage, excessive current, oscillation detection, feedback control Circuit error (power monitor), fan stop Temperature error detection
Output terminals	Output terminal type: Voltage: Plug-in terminal (safety terminal) AUX: Coaxial connector Current: Large binding post Output LO terminal: Single line grounding/open selectable. Withstand voltage to ground when open: 12 Vpk
Display	5.7-inch color TFT LCD Display resolution: 640×480 The LCD may include a few defective pixels. There may be some pixels on the LCD that never light or are always lit (0.002% or less of the total number of display pixels including RGB). These pixels are not defects.
Other Functions	Beep sound configuration, self-test, error log, product information display, communication configuration (USB, Ethernet, GP-IB), simple adjustment function

14.9 External Input and Output

Master/Slave Synchronous Operation Input and Output (Two terminals each; four terminals total)

Item	Specifications
Input/output voltage	3 V ± 0.1 Vrms, sine wave
Frequency range	40 Hz to 1.2 kHz
Input resistance	Approx. 1 MΩ
Output resistance	Approx. 50 Ω

Terminal		Frequency selection		
		Internal oscillator	EXT[1, 2]	LINE (50 Hz to 60 Hz)[2, 3, 4]
Input	cos(I) (EXT1)	Not used	Used	Not used
	sin(Q)	Not used	Used	Not used
Output	cos(I)	Internal cos(I) signal	Connected to input terminal cos(I)	Internal cos(I) signal
	sin(Q)	Internal sin(Q) signal	Connected to input terminal sin(Q)	Internal sin(Q) signal

1 Phase difference between I and Q: Within 90° ± 0.1°
2 The frequency that appears when EXT or LINE is selected is a reference value.
3 If the commercial power frequency is less than 45 Hz or greater than 65 Hz, the instrument generates an error and cannot produce output.
4 If the duty ratio exceeds 50 ± 5%, the instrument generates an error and cannot produce output.

14.10 Computer Interface

USB for PC Connection

Item	Specifications
Number of ports	1
Connector type	Type B connector (receptacle)
Electrical and mechanical	Complies with USB Rev2.0
Supported transfer modes	HS (High Speed) mode(480 Mbps) and FS (Full Speed) mode(12 Mbps)
Supported protocols	USBTMC-USB488 (USB Test and Measurement Class Ver.1.0)
PC system requirements	A PC with a USB port, running the English or Japanese version of Windows 7 (32 bit/64 bit), Windows 8 (32 bit/64 bit), or Windows 10 (32 bit/64 bit)

Ethernet

Item	Specifications
Ports	1
Connector type	RJ-45 connector
Electrical and mechanical	Conforms to IEEE 802.3
Transmission system	Ethernet (100BASE-TX/10BASE-T)
Transfer rate	100 Mbps max.
Protocol	TCP-IP(supported IPv4)
Supported services	VXI-11, DHCP

GP-IB

Item	Specifications
Electrical and mechanical	Complies with IEEE St'd 488-1978
Functional specifications	SH1, AH1, T6, L4, SR1, RL1, PP0, DC1, DT0, C0
Protocol	Complies with IEEE St'd 488.2-1992
Address	0 to 30

Link Interface

Item	Specifications
Number of ports	2
Connector type	Type A connector
Electrical and mechanical	Equivalent to USB Rev2.0
System requirements	Valid only for the connection between the master and slave LS3300 devices

14.11 General Specifications

Item	Specifications
Warm-up time	Approx. 30 minutes (after acclimatizing the LS3300 to the operating environment for at least an hour)
Operating environment	Temperature: 5°C to 40°C Humidity: 20% RH to 80% RH (no condensation)
Storage environment	Temperature: –15°C to 60°C Humidity: 20% RH to 80% RH (no condensation)
Operating altitude	Up to 2000 m
Installation location	Indoors
Orientation	Horizontal (can be tilted using the stand). Vertical installation is prohibited.
Rated supply voltage	100VAC to 120 VAC, 200 VAC to 240 VAC
Permitted supply voltage range	90VAC to 132 VAC, 180 VAC to 264 VAC
Rated supply frequency	50Hz/60 Hz
Permitted power supply frequency range	48Hz to 63 Hz
Maximum power consumption	Approx. 200 VA
Withstand voltage	1500 VAC for 1 minute between the power supply and case
External dimensions	426 (W) × 132 (H) × 450 (D) mm
Weight	Approx. 20 kg
Safety standards[1]	Compliant standards EN61010-1 Overvoltage Category II[2] Pollution degree2[3] EN61010-2-030 Measurement Category Other (O)[4]
Emissions[1]	Compliant standards EN61326-1 Class A EN55011 Class A, Group 1 EN61000-3-2 EN61000-3-3 RCM EN55011 Class A, Group 1 Korea Electromagnetic Conformity Standard (한국 전자파적합성기준) This product is a Class A (for industrial environment) product. Operation of this product in a residential area may cause radio interference in which case the user will be required to correct the interference. Cable conditions Voltage terminals (VOLTAGE) Use the included measurement leads (B8506ZK; red and black, one pc. each; length: 1 m). Current terminal (CURRENT) Use the included measurement leads (B8506WA; red and black, one pc. each; length: 1.5 m). GP-IB connector (GP-IB) Use a shielded cable that is 3 m in length or less. Ethernet port (ETHERNET) Use a category 5 or better Ethernet cable (STP) that is 30 m in length or less. USB port for PCs (USB) Use a shielded USB cable that is 3 m in length or less. AUX terminal Use the 366924 (length: 1 m), sold separately. External signal input terminal (EXT OSC INPUT) Use the 366924 (length: 1 m), sold separately. External signal output terminal (EXT OSC OUTPUT) Use the 366924 (length: 1 m), sold separately LINK port(Master-Slave) Use a shielded USB cable that is 3 m in length or less.
Immunity[1]	Compliant standards EN61326-1 Table 2 (for use in industrial locations) Influence in the immunity test environment Within ±15% of the range setting Cable conditions Same as the cable conditions for emission above.

14.11. General Specifications

Item	Specifications
Environmental standards[1]	Compliant standard EN50581 Monitoring and control instruments including industrial monitoring and control instruments

1 Applies to products with CE marks. For information on other products, contact your nearest YOKOGAWA dealer.

2 The overvoltage category (installation category) is a value used to define the transient overvoltage condition and includes the rated impulse withstand voltage. The overvoltage category II applies to electrical equipment that is powered through a fixed installation, such as a switchboard.

3 Pollution Degree applies to the degree of adhesion of a solid, liquid, or gas that deteriorates withstand voltage or surface resistivity. Pollution degree 2 applies to normal indoor atmospheres (with only non-conductive pollution).

4 The measurement category of the LS3300 terminals is Other (O). Do not use it to measure the main power supply or for Measurement Categories II, III, and IV.
Measurement category O applies to measurement of circuits that are not directly connected to a main power source. This category applies to measurement of secondary electric circuits in equipment across a transformer. The estimated transient overvoltage that may appear at the LS3300 signal input terminals is 1500 V.
Measurement category II applies to measurement of circuits, such as household electric appliances and portable electric tools, that are connected to low-voltage installations.
Measurement category III applies to measurement of facility circuits, such as distribution boards and circuit breakers.
Measurement category IV applies to measurement of power source circuits, such as entrance cables to buildings and cable systems, for low-voltage installations.

14.12 External Dimensions

Unit: mm

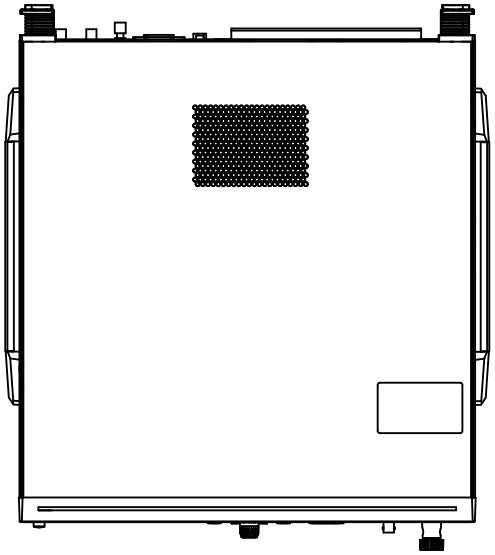

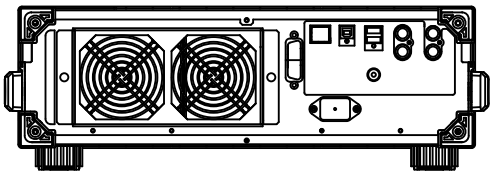

Rear view

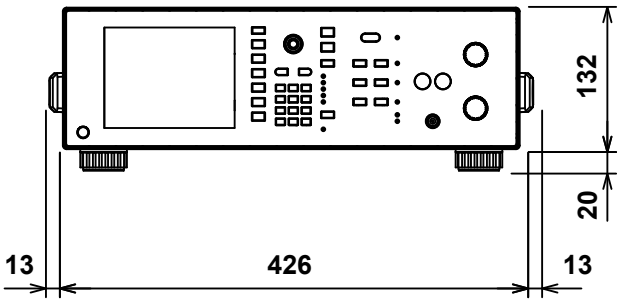

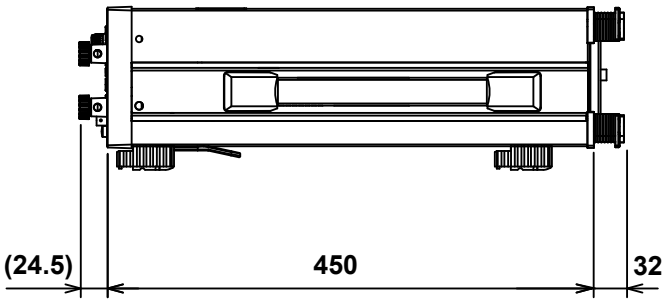

Unless otherwise specified, tolerances are ±3% (however, tolerances are ±0.3 mm when below 10 mm).

Appendix 1 Block Diagram

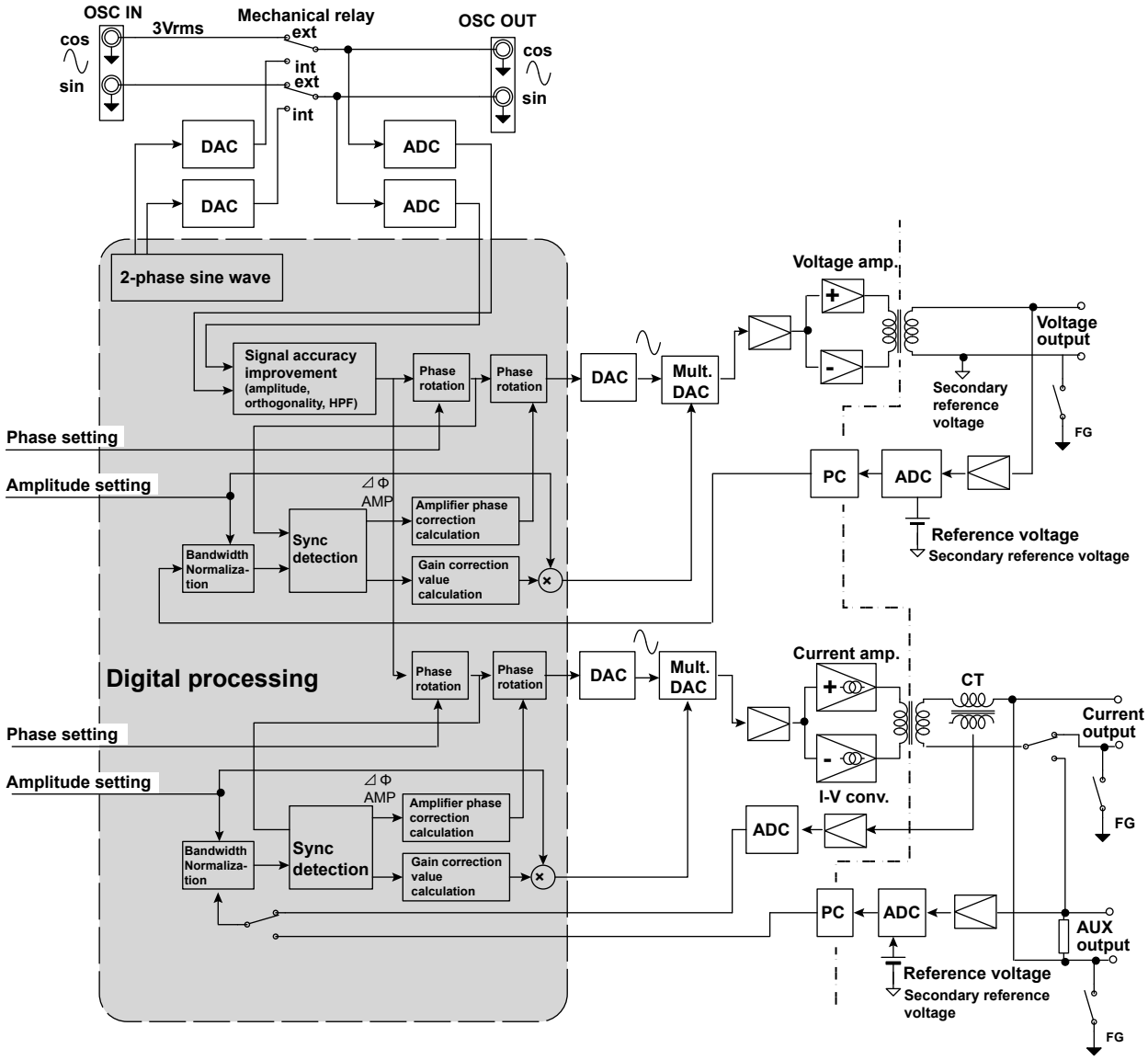

The LS3300 consists of a primary side that controls the oscillator output and a secondary side that is isolated by a transformer.
The oscillator signal (sine wave from the two-phase sine wave generator or external input sine wave) passes through an A/D converter and then a signal accuracy improvement block (PLL) to have the amplitude and orthogonality refined, and becomes the voltage and current reference signal.
The phase of the reference signal is shifted in two stages. A phase value is applied to the phase rotation block of the first stage, and an amplifier phase correction value is applied to that of the second stage.
The reference signal after phase shifting passes through a D/A converter, is multiplied by the gain correction value, and amplified by the voltage or current amplifier to become the voltage or current output.
In addition, the current output is run through a resister inside the device and becomes the AUX output.
In the case of voltage and AUX outputs, the electrical potential at the LO terminal of the secondary side is used as a reference to detect the output voltage. Then, the detected value is A-to-D converted, isolated by a photocoupler, and fed back into the amplitude control block.

In the case of current output, a current transformer is used to detect and isolate the output current. Then, I-V conversion and A-to-D conversion is performed at the primary electric potential, and the digital signal is fed back into the amplitude control block.
In the amplitude and phase control block, the target output level and phase are set through the panel or remote control. Digital smoothing is used to prevent output overshoot and transformer biasing that could occur due to drastic changes in the output when the setting is changed by a great amount.
The gain correction calculation block immediately after the output is turned on assumes temporarily that there are no errors in the amplification factor or input amplitude and provides a coefficient that corresponds to the setting (after it has been smoothed) to the multiplying DAC. After the operation starts, the amplitude is adjusted every 0.5 seconds on the basis of the feedback voltage or current signal.
The amplitude of the signal that is fed back to the amplitude and phase control block is normalized by the amplitude normalization block based on the ratio of the setting and the output value. Next, the amplifier phase difference and amplitude ratio are determined by the synchronization detection block based on the normalized feedback signal and the reference signal from the phase rotation block (first stage) described earlier. The correction value calculated from the amplifier phase difference is applied to phase rotation (second stage). Moreover, the gain correction value calculated from the amplitude ratio controls the amplitudes of the voltage and current outputs.
Because the LS3300 amplitude is controlled based on the amplitude of the fundamental waveform of the waveform, if it is used in tests for verifying the excitation current of a transformer or the like or other similar tests, errors occur in the output level measured using the average value.
On the other hand, during power calibration, if the output waveform distortion increases due to a nonlinear load or an application of an external signal with large distortion, high reproducibility can be attained.

Appendix 2 Factory Default Settings

Item		Factory Default Value	Initialized by Setup Initialization or *RST?	Setting Saved When Powered Off?
Voltage output	Range	100 V	Yes	Yes
	Level	0.000 V	Yes	No
	Level Ratio	100.000%	Yes	No
	Phase	0.000°	Yes	Yes
Voltage output	Range	1 A	Yes	Yes
	Level	0.00000 A	Yes	No
	Level ratio	100.000%	Yes	No
	Phase	0.000°	Yes	Yes
Power factor		1.0000	Yes	Yes
Frequency		50.000 Hz	Yes	Yes
Wiring system		1P2W	Yes	Yes
Unit priority		UNIT3	Yes	Depends (not saved for EXTernal)
Reference signal		INTernal	Yes	Yes
Sensor ratio		1000.0000 mV/A	Yes	Yes
OUTPUT		OFF	Yes	No
V, I (standby)		OFF	Yes	No
Sweep time		16 s	Yes	Yes
Sweep range		0-100%	Yes	Yes
Grounding		ON	Yes	Yes
BEEP		ON	No	Yes
LCD brightness		5	No	Yes
Phase display		Type2	No	Yes
GP-IB	Address	1	No	Yes
LAN	DHCP	ON	No	Yes
	IP address	192.168.0.1	No	Yes
	Subnet mask	255.255.255.0	No	Yes
	Gateway address	0.0.0.0	No	Yes

Appendix 3 About the IEEE 488.2-1992 Standard

The LS3300's GP-IB interface conforms to the IEEE 488.2-1992 standard. This standard specifies that the following 23 items be stated in the document. This section describes these items.

(1) Of the IEEE 488.1 interface functions, the subsets that are supported
See section 9.1, "GP-IB Interface Features and Specifications."

(2) The operation of the device when it is assigned an address outside the 0 to 30 range.
The address of this instrument cannot be set to an address outside the 0 to 30 range.

(3) Reaction of the device when the user changes the address
The address change is detected when the user presses UTILITY and Remote and then changes the address on the GPIB menu. The new address is valid until the next time it is changed.

(4) Device settings at power-up. The commands that can be used at power-up.
As a basic rule, the previous settings (the settings that were in use when the LS3300 was turned off) are used.
There are no limitations on the commands that can be used at power-up.

(5) Message exchange options

(a) Input buffer size
1024 bytes.

(b) Queries that return multiple response messages
See the example of the commands given in chapter 13.

(c) Queries that create response data when the command syntax is being analyzed
All queries create response data when the command syntax is analyzed.

(d) Queries that create response data during reception
There are no queries of which the response data are created upon receiving a send request from the controller.

(e) Commands that have parameters that restrict one another
See the example of the commands given in chapter 11.

(6) Items that are included in the functional or composite header elements constituting a command
See chapters 10 and 11.

(7) Buffer sizes that affect block data transmission
When block data is being transmitted, the output queue is expanded to match the size of the data that is being transmitted.

(8) A list of program data elements that can be used in equations and their nesting limitations
Equations cannot be used.

(9) Syntax of the responses to queries
See the example of the commands given in chapter 11.

(10) Communication between devices that do not follow the response syntax
Not supported.

(11) Size of the response data block
0

(12) A list of supported common commands
See section 11.10, "Common Command Group."

(13) Device condition after a successful calibration
*CAL? is not supported.

(14) The maximum length of block data that can be used for the *DDT trigger macro definition
Not supported.

(15) The maximum length of the macro label for defining macros, the maximum length of block data that can be used for the macro definition, and the process when recursion is used in macro definitions
Macro functions are not supported.

(16) Reply to the *IDN? query
See section 11.10, "Common Command Group."

(17) Size of storage area for protected user data for PUD and *PUD?
*PUD and *PUD? are not supported.

(18) The length of the *RDT and *RDT? resource names
*RDT and *RDT? are not supported.

(19) The change in the status due to *RST, *LRN?, *RCL, and *SAV

***RST**
See section 11.10, "Common Command Group."

***LRN?, *RCL, and *SAV**
These common commands are not supported.

(20) The extent of the self-test using the *TST? command
See section 11.10, "Common Command Group."

(21) The structure of the extended return status
See chapter 12.

(22) Whether each command is processed in an overlapped manner or sequentially
See section 10.5, "Synchronization with the Controller" and chapter 11.

(23) The description of the execution of each command
See the functions of the commands in chapter 11.

Appendix 4 Calibrating the Phase Meter

By synchronizing the operation of two LS3300s with the wiring system set to single-phase two-wire (1P2W), you can output voltages with a phase different from that of the reference signal. These signals can be used to calibrate phase meters.

Synchronous Operation

Connect the master LS3300 to a slave LS3300 according to the instructions in section 5.1.

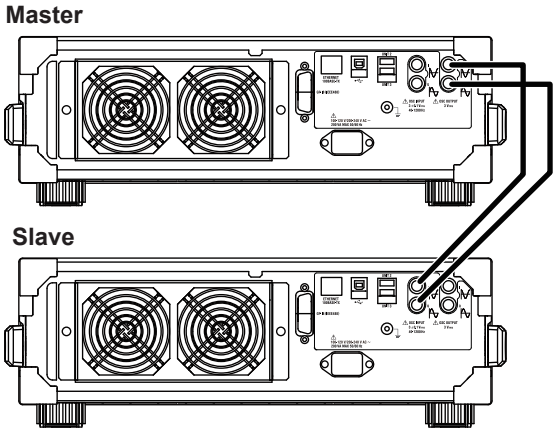

The signal set on the LS3300 to be used as the master device is the reference signal.
Set the slave device's Oscillation to EXTernal.

Calibrating a Phase Meter

Connect the master and slave LS3300s' voltage output terminals to the input terminals of the phase meter.

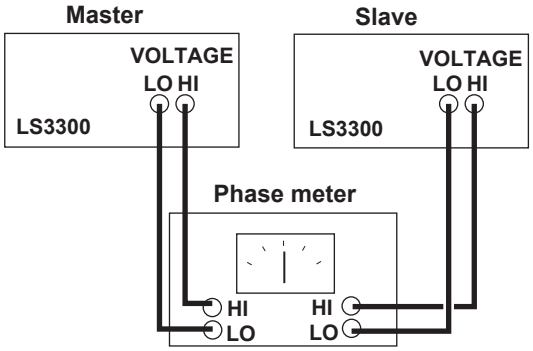

Set the master and slave LS3300s' voltage output according to the input voltage of the phase meter.
Set the master device's frequency to the frequency at the point to be calibrated.
Set the phase of the master device to 0°. Set the phase of the slave device to the phase to be calibrated.
Turn on the output of the master and slave devices.
Compare the phase meter measurement to the phase of the slave device.

Index

Numeric

Page

1P2W 2-8, 5-6
1P2W HI Current 2-8, 5-6
1P2W(HI Current) 5-16
1P3W 2-8, 5-6
3P3W 2-8, 5-6
3P3W (3V3A) 2-8, 5-6
3P4W 2-8, 5-6

A

Page

accessory iv
optional iv
standard iii
address command 9-7
adjustment 13-12
attaching the filter 13-11
AUX 1-6, 3-15

B

Page

balanced signals 5-6
beep sound 2-12, 6-1
block diagram App-1

C

Page

calibrate phase meter App-5
calibration 13-12
carrying the instrument 3-2
cleaning 3-2
clean the filter 13-11
Common Command Group 11-18
common command header 10-3
COMMunicate Group 11-4
compound header 10-3
connection method 2-8
crimped terminal 3-14
current range 2-3

D

Page

default gateway 8-4
default setting App-3
DHCP 8-3
Display 6-2
display setting 2-12

E

Page

EARTH 4-9
ERROR 1-6
error code 13-2
error log 2-12
Error Log 6-5
error queue 12-6
ethernet 8-1
Ethernet 8-3
execution error 13-5
extended event register 12-5
External 5-2
external signal input 5-3
EXT OSC INPUT 5-3
Ext Sensor 2-3

F

Page

faults and corrective action 13-1
frequency 2-4
Frequency 4-2, 4-5
front panel 1-1

G

Page

GP-IB 9-1
GP-IB address 9-5

H

Page

header 10-3
HI Current 5-16
high current output 2-3

I

Page

initialize 2-12
Initialize 6-6
installation conditions 3-3
installation orientation 3-4
Internal 5-2
internal signal output 5-4
I/O circuit diagram 5-3
IP address 8-4

L

Page

Level 4-1
level ratio 2-2, 2-3
Level Ratio 4-1, 4-4
LINE 5-2
LO terminal 4-9

M

Page

MODEL iii

O

Page

operation indicator 4-10
optional accessory iv
Oscillation 5-2
OSCillator Group 11-5
OSC INPUT 2-7
OSC OUTPUT 2-7, 5-4
OUTPUT 4-10
OUTPut Group 11-6
output level 2-2, 2-3
Output Level 4-4
output queue 12-6

P

	Page
phase	2-4
Phase	4-1
Phase Chart	6-3
phase display	1-4, 2-12, 6-3
power factor	2-4
Power Factor	4-2, 4-5
power supply	3-6
power switch	3-8
Priority	5-5
product information	2-12, 6-7
program message	10-1

Q

	Page
query error	13-6

R

	Page
rack-mounting	3-5
Range	4-1, 4-4
RANGE	4-7
rear panel	1-2
Remote	8-3, 9-5
response	10-5
response message	10-1
response message unit syntax	10-2
responses to interface message	9-6

S

	Page
Selftest	13-9
sensor ratio	2-3
Sensor Ratio	4-8
simple header	10-3
single-phase three-wire (S phase reference)	5-10
single-phase three-wire (T phase reference)	5-9
single-phase two-wire	5-7
single-phase two-wire (Hi Current)	5-8
soft key	1-3
SOURce Group	11-7
STABILIZING	1-6
standard accessory	iii
standard event register	12-4
status byte	12-3
STATus Group	11-10
status report	12-1
subnet mask	8-4
suffix code	iii
SWEEP	4-7
Sweep Down	4-12
SWEep Group	11-13
sweeping	2-5
sweep range	2-5, 4-7
sweep time	2-5, 4-7
Sweep Up	4-12
synchronous communication	2-8
synchronous operation	2-7
syntax error	13-4
SYSTem Group	11-14

T

	Page
three-phase four-wire	5-15
three-phase three-wire	5-13, 5-14
three-phase three-wire (S phase reference)	5-12
three-phase three-wire (T phase reference)	5-11
TIME	4-7
turn off the display	6-2
Type1	1-4
Type2	1-4

U

	Page
UNIT	5-18
UNIT2	2-8
UNIT3	2-8
universal command	9-7
USB	7-2

V

	Page
V key	4-1
voltage range	2-2
voltage terminal	3-14

W

	Page
warning code	13-2
Wiring	5-5
WIRing Group	11-17